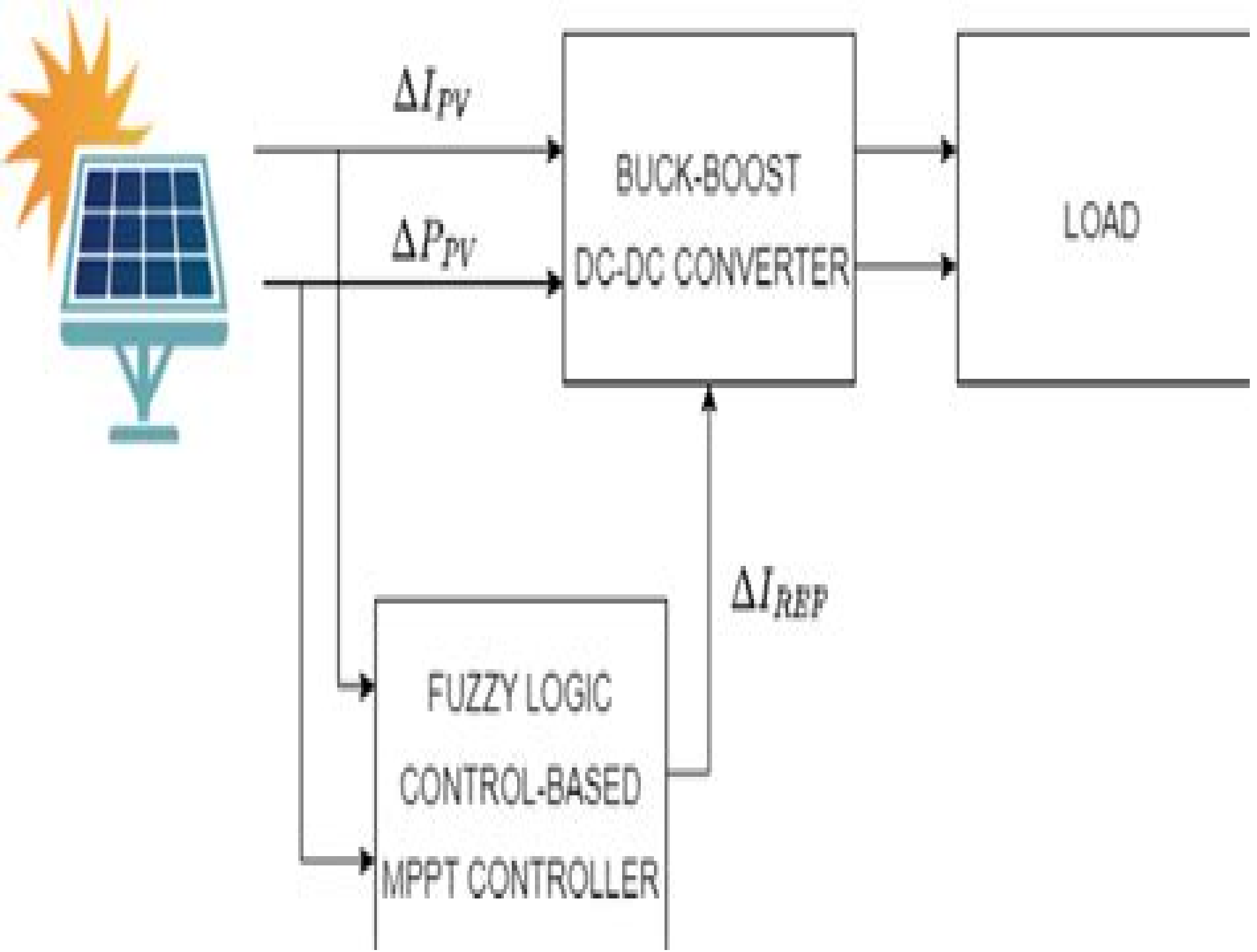
ΔI_{PV}
ΔP_{PV}
BUCK-BOOST
DC-DC CONVERTER
LOAD
ΔI_{REF}
FUZZY LOGIC
CONTROL-BASED
MPPT CONTROLLER

Implementation Of Mppt Control Using Fuzzy Logic In Solar

Reginald E. Waddell (PE.)

Implementation Of Mppt Control Using Fuzzy Logic In Solar:

Artificial Intelligence in Renewable Energetic Systems Mustapha Hatti,2018-03-12 This book includes the latest research presented at the International Conference on Artificial Intelligence in Renewable Energetic Systems held in Tipaza Algeria on October 22 24 2017 The development of renewable energy at low cost must necessarily involve the intelligent optimization of energy flows and the intelligent balancing of production consumption and energy storage Intelligence is distributed at all levels and allows information to be processed to optimize energy flows according to constraints This thematic is shaping the outlines of future economies of and offers the possibility of transforming society Taking advantage of the growing power of the microprocessor makes the complexity of renewable energy systems accessible especially since the algorithms of artificial intelligence make it possible to take relevant decisions or even reveal unsuspected trends in the management and optimization of renewable energy flows The book enables those working on energy systems and those dealing with models of artificial intelligence to combine their knowledge and their intellectual potential for the benefit of the scientific community and humanity Evolution in Signal Processing and Telecommunication Networks Vikrant Bhateja,Anagha Bhattacharya,Sarika Shrivastava,2026-02-14 The book discusses the latest developments and outlines future trends in the fields of microelectronics electromagnetics and telecommunication It contains original research works presented at the International Conference on Microelectronics Electromagnetics and Telecommunication ICMEET 2024 organized by Department of Electronics and Communication Engineering National Institute of Technology Mizoram India during 19 20 December 2024 The book is divided into four volumes and it covers papers written by scientists research scholars and practitioners from leading universities engineering colleges and R D institutes from all over the world and shares the latest breakthroughs in and promising solutions to the most important issues facing today s society

Computational Problems in Science and Engineering II Nikos E. Mastorakis,Imre J. Rudas,Yuriy S. Shmaliy,2025-02-28 This book provides readers with modern computational techniques for solving variety of problems from electrical mechanical civil and chemical engineering Mathematical methods are presented in a unified manner so they can be applied consistently to problems in applied electromagnetics strength of materials fluid mechanics heat and mass transfer environmental engineering biomedical engineering signal processing automatic control and more Recent Developments in Control, Automation and Power Engineering Hemender Pal Singh,Ishak B. Aris,Anwar Shahzad Siddiqui,2025-05-23 This book contains original peer reviewed research papers from the 5th international conference RDCAPE 2023 This book presents the latest developments in the field of electrical engineering and related areas distinctively and engagingly The book discusses issues related to new challenges of renewable energy new control paradigms for efficient automation and decentralized power systems new economics of open auction based electricity generation transmission and distribution markets etc Apart from these many other topics of interest for readers are also covered The papers presented here share the latest findings on

various issues as mentioned above It makes the book a useful resource for researchers scientists industry people and students alike **Hybrid Renewable Energy Systems** Djamila Rekioua,2019-11-27 This book discusses the supervision of hybrid systems and presents models for control optimization and storage It provides a guide for practitioners as well as graduate and postgraduate students and researchers in both renewable energy and modern power systems enabling them to quickly gain an understanding of stand alone and grid connected hybrid renewable systems The book is accompanied by an online MATLAB package which offers examples of each application to help readers understand and evaluate the performance of the various hybrid renewable systems cited With a focus on the different configurations of hybrid renewable energy systems it offers those involved in the field of renewable energy solutions vital insights into the control optimization and supervision strategies for the different renewable energy systems Advances in Energy and Control Systems Afzal Sikander,Marta Zurek-Mortka,Chandan Kumar Chanda,Pranab Kumar Mondal,2024-06-14 This book gathers selected research papers presented at the 5th International Conference on Energy Systems Drives and Automation ESDA 2022 It covers a broad range of topics in the fields of renewable energy power management drive systems for electrical machines and automation This book also comprehensively discusses related tools and techniques and is a valuable resource for researchers professionals and students in electrical and mechanical engineering disciplines **Fuzzy Logic Control of MPPT Controller for PV Systems** Mahmud Ahmed Sasi,2017 This thesis presents a comparison between two methods to optimize the energy extraction in a photovoltaic PV power system The maximum power of a PV module varies due to changing temperature solar radiation and load To maximize efficiency PV systems use a maximum power point tracker MPPT to constantly extract the highest power that can be produced by a solar panel and then deliver it to the load The general structure of an MPPT system contains a DC DC converter an electronic device that converts a source of direct current DC from one voltage level to another and a controller The MPPT finds and maintains operations at the maximum power point using a tracking algorithm during variations in weather conditions Many different algorithms of MPPT have been proposed and discussed in the literature but most of these methods have disadvantages in terms of efficiency accuracy and flexibility Because of the nonlinear behavior of PV module current voltage characteristics and the nonlinearity of DC DC converters due to switching conventional controllers are unable to provide the best response especially when dealing with wide parameter variations and line transients The goal of this work is to design and implement a maximum power point tracker that uses a fuzzy logic control algorithm Fuzzy logic naturally provides a superior controller for this type of nonlinear application This method also benefits from the artificial intelligence approach for overcoming the complexity in modeling nonlinear systems In order to succeed in this work an MPPT system consisting of a PV module a DC DC converter batteries and a fuzzy logic controller is designed and simulated in Simulink Analyses of buck boost and buck boost converter characteristics are carried out to find the most suitable topology for the PV system used An integrated model of the PV module with the identified

converter and batteries is simulated in MATLAB to derive the expert knowledge needed to formulate and tune the fuzzy logic controller The simulation results show that the fuzzy logic controller is able to obtain the desired outcomes and is ready to be applied to the hardware system This entire research work aims to compare two types of controller based MPPT techniques Both MPPTs are based on the same topology of DC DC converter and are applied with the same PV system specifications That is one of the MPPTs was kept at its original specifications and the other one was modified by changing the internal PIC 16F684 controller with an external Arduino Uno controller Based on a MATLAB fuzzy logic design the Arduino code was programmed and uploaded into an Arduino board by using Arduino software IDE The proposed method illustrates that the performance of MPPT is improved in terms of oscillations about the maximum power point speed and sensitivity to parameter variation The results indicate that a significant amount of extra power can be extracted from a photovoltaic module by using a fuzzy logic based maximum power point tracker in comparison with a PIC 16F684 controller based maximum power tracker Moreover this gives improved efficiency for the operation of a PV power system since batteries can be sufficiently charged and used during periods of low solar radiation **Computer, Communication and Electrical Technology** Debatosh Guha,Badal Chakraborty,Himadri Sekhar Dutta,2017-03-16 The First International Conference on Advancement of Computer Communication and Electrical Technology focuses on key technologies and recent progress in computer vision information technology applications VLSI signal processing power electronics drives and application of sensors transducers etc Topics in this conference include Computer Science This conference encompassed relevant topics in computer science such as computer vision intelligent system networking theory and application of information technology Communication EngineeringTo enhance the theory technology of communication engineering ACCET 2016 highlighted the state of the art research work in the field of VLSI optical communication and signal processing of various data formatting Research work in the field of microwave engineering cognitive radio and networks are also included Electrical Technology The state of the art research topic in the field of electrical instrumentation engineering is included in this conference such as power system stability protection non conventional energy resources electrical drives and biomedical engineering Research work in the area of optimization and application in control measurement instrumentation are included as well **Advances in Energy Science and Technology** Xiao Chun Tang,Xiao Hong Chen,Yu Xiang Dong,Xiu Guo Wei,Qing Sheng Yang,2013-02-13 Selected peer reviewed papers from the 2012 International Conference on Sustainable Energy and Environmental Engineering ICSEEE 2012 December 29 30 2012 Guangzhou China Advancements in Automation and Control Technologies Sarojini Selvaperumal,R. Nagarajan,P. Nedumal Pugazhenthi,2014-06-18 Selected peer reviewed papers from the 2014 International Conference on Advancements in Automation and Control ICAAC 2014 April 11 12 2014 Ramanathapuram Tamilnadu India Solar Engineering American Society of Mechanical Engineers. Solar Energy Division. Conference,2006 **TENCON 2004** ,2004 **Tamkang Journal of Science and Engineering** ,2004 **The Dhaka**

University Journal of Science ,2006 Index to IEEE Publications Institute of Electrical and Electronics Engineers,1998 Issues for 1973 cover the entire IEEE technical literature **Maximum Power Point Tracking Using Fuzzy Logic Control** Mohamed Ezzat Salem,2011-06-29 Scientific Study from the year 2004 in the subject Electrotechnology language English abstract This paper proposes an intelligent control method for the maximum power point tracking MPPT of a photovoltaic system under variable temperature and insolation conditions This method uses a fuzzy logic controller applied to a DC DC converter device The different steps of the design of this controller are presented together with its simulation The PV system that I chose to simulate to apply my techniques on it is stand alone PV water pumping system Results of this simulation are compared to those obtained by the system without MPPT They show that the system with MPPT using fuzzy logic controller increase the efficiency of energy production from PV *Government Reports Announcements & Index* ,1994-12 Enhanced MPPT Controllers for Smart Grid Applications Mohamed Khallaf,2019 Over the past years the energy demand has been steadily growing and so methods of how to cope with this staggering increase are being researched and utilized One method of injecting more energy to the grid is renewable energy which has become in recent years an integral part of any country s power generation plan Thus it is a necessity to enhance renewable energy resources and maximize their grid utilization so that these resources can step up and reduce the over dependency of global energy production on depleting energy resources This thesis focuses on solar power and effective means to enhance its efficiency through the use of different controllers In this regard substantial research efforts have been done However due to the current market and technological development more options are made available that are able to boast the efficiency and utilization of renewables in the power mix In this thesis an enhanced maximum power point tracking MPPT controller has been designed as part of a Photovoltaic PV system to generate maximum power to satisfy load demand The PV system is designed and simulated using MATLAB consisting of a solar panel array MPPT controller boost converter and a resistive load The solar panel chosen for the array is Sun Power SPR 440NE WHT D and the array is designed to produce 150 kW of power The MPPT controller is designed using three different algorithms and the results are compared to identify each controller s fortes and drawbacks The three designed controllers used are based on Perturb and Observe P the first is when the panel array is subjected to constant amount of solar irradiance along with a constant atmospheric temperature and the second scenario has varying solar irradiance and atmospheric temperature The performance of these controllers is analyzed and compared in terms of the output power efficiency system dynamic response and finally the oscillations behavior After analyzing the results it is shown that Fuzzy Logic Controller design performed better compared to the other controllers as it had in most cases the highest mean power efficiency and fastest response Abstract **Design and Implementation of a Multivariable Controller Using Fuzzy Logic** Reginald Eugene Waddell,2002 **Design and Implementation of a Multivariable Controller Using Fuzzy Logic** Reginald E. Waddell (PE.),2003

This Captivating World of E-book Books: A Thorough Guide Unveiling the Pros of E-book Books: A Realm of Ease and Versatility E-book books, with their inherent portability and ease of availability, have liberated readers from the limitations of physical books. Done are the days of lugging bulky novels or carefully searching for particular titles in shops. E-book devices, stylish and portable, effortlessly store an extensive library of books, allowing readers to immerse in their preferred reads anytime, anywhere. Whether traveling on a bustling train, relaxing on a sun-kissed beach, or just cozying up in bed, E-book books provide an exceptional level of ease. A Literary World Unfolded: Discovering the Wide Array of Kindle Implementation Of Mppt Control Using Fuzzy Logic In Solar Implementation Of Mppt Control Using Fuzzy Logic In Solar The Kindle Store, a virtual treasure trove of literary gems, boasts an extensive collection of books spanning diverse genres, catering to every readers preference and choice. From captivating fiction and mind-stimulating non-fiction to classic classics and modern bestsellers, the E-book Store offers an unparalleled variety of titles to discover. Whether seeking escape through engrossing tales of fantasy and exploration, delving into the depths of past narratives, or expanding ones knowledge with insightful works of scientific and philosophy, the E-book Store provides a doorway to a literary universe brimming with limitless possibilities. A Revolutionary Factor in the Bookish Landscape: The Enduring Influence of E-book Books Implementation Of Mppt Control Using Fuzzy Logic In Solar The advent of E-book books has certainly reshaped the bookish landscape, introducing a paradigm shift in the way books are released, disseminated, and consumed. Traditional publication houses have embraced the digital revolution, adapting their approaches to accommodate the growing demand for e-books. This has led to a rise in the accessibility of E-book titles, ensuring that readers have access to a vast array of literary works at their fingers. Moreover, Kindle books have democratized access to literature, breaking down geographical barriers and offering readers worldwide with similar opportunities to engage with the written word. Irrespective of their place or socioeconomic background, individuals can now engross themselves in the captivating world of books, fostering a global community of readers. Conclusion: Embracing the Kindle Experience Implementation Of Mppt Control Using Fuzzy Logic In Solar Kindle books Implementation Of Mppt Control Using Fuzzy Logic In Solar, with their inherent ease, versatility, and vast array of titles, have certainly transformed the way we experience literature. They offer readers the freedom to discover the limitless realm of written expression, anytime, anywhere. As we continue to navigate the ever-evolving digital landscape, Kindle books stand as testament to the persistent power of storytelling, ensuring that the joy of reading remains accessible to all.

https://db1.greenfirefarms.com/data/book-search/Download_PDFS/lala%20en%20la%20ciudad%20de%20las%20piramides%20lainfotecasantillana.pdf

Table of Contents Implementation Of Mppt Control Using Fuzzy Logic In Solar

1. Understanding the eBook Implementation Of Mppt Control Using Fuzzy Logic In Solar
    - The Rise of Digital Reading Implementation Of Mppt Control Using Fuzzy Logic In Solar
    - Advantages of eBooks Over Traditional Books
2. Identifying Implementation Of Mppt Control Using Fuzzy Logic In Solar
    - Exploring Different Genres
    - Considering Fiction vs. Non-Fiction
    - Determining Your Reading Goals
3. Choosing the Right eBook Platform
    - Popular eBook Platforms
    - Features to Look for in an Implementation Of Mppt Control Using Fuzzy Logic In Solar
    - User-Friendly Interface
4. Exploring eBook Recommendations from Implementation Of Mppt Control Using Fuzzy Logic In Solar
    - Personalized Recommendations
    - Implementation Of Mppt Control Using Fuzzy Logic In Solar User Reviews and Ratings
    - Implementation Of Mppt Control Using Fuzzy Logic In Solar and Bestseller Lists
5. Accessing Implementation Of Mppt Control Using Fuzzy Logic In Solar Free and Paid eBooks
    - Implementation Of Mppt Control Using Fuzzy Logic In Solar Public Domain eBooks
    - Implementation Of Mppt Control Using Fuzzy Logic In Solar eBook Subscription Services
    - Implementation Of Mppt Control Using Fuzzy Logic In Solar Budget-Friendly Options
6. Navigating Implementation Of Mppt Control Using Fuzzy Logic In Solar eBook Formats
    - ePub, PDF, MOBI, and More
    - Implementation Of Mppt Control Using Fuzzy Logic In Solar Compatibility with Devices
    - Implementation Of Mppt Control Using Fuzzy Logic In Solar Enhanced eBook Features
7. Enhancing Your Reading Experience
    - Adjustable Fonts and Text Sizes of Implementation Of Mppt Control Using Fuzzy Logic In Solar
    - Highlighting and Note-Taking Implementation Of Mppt Control Using Fuzzy Logic In Solar
    - Interactive Elements Implementation Of Mppt Control Using Fuzzy Logic In Solar

8. Staying Engaged with Implementation Of Mppt Control Using Fuzzy Logic In Solar
    - Joining Online Reading Communities
    - Participating in Virtual Book Clubs
    - Following Authors and Publishers Implementation Of Mppt Control Using Fuzzy Logic In Solar
9. Balancing eBooks and Physical Books Implementation Of Mppt Control Using Fuzzy Logic In Solar
    - Benefits of a Digital Library
    - Creating a Diverse Reading Collection Implementation Of Mppt Control Using Fuzzy Logic In Solar
10. Overcoming Reading Challenges
    - Dealing with Digital Eye Strain
    - Minimizing Distractions
    - Managing Screen Time
11. Cultivating a Reading Routine Implementation Of Mppt Control Using Fuzzy Logic In Solar
    - Setting Reading Goals Implementation Of Mppt Control Using Fuzzy Logic In Solar
    - Carving Out Dedicated Reading Time
12. Sourcing Reliable Information of Implementation Of Mppt Control Using Fuzzy Logic In Solar
    - Fact-Checking eBook Content of Implementation Of Mppt Control Using Fuzzy Logic In Solar
    - Distinguishing Credible Sources
13. Promoting Lifelong Learning
    - Utilizing eBooks for Skill Development
    - Exploring Educational eBooks
14. Embracing eBook Trends
    - Integration of Multimedia Elements
    - Interactive and Gamified eBooks

Implementation Of Mppt Control Using Fuzzy Logic In Solar Introduction

In this digital age, the convenience of accessing information at our fingertips has become a necessity. Whether its research papers, eBooks, or user manuals, PDF files have become the preferred format for sharing and reading documents. However, the cost associated with purchasing PDF files can sometimes be a barrier for many individuals and organizations. Thankfully, there are numerous websites and platforms that allow users to download free PDF files legally. In this article, we will explore some of the best platforms to download free PDFs. One of the most popular platforms to download free PDF files is Project

Gutenberg. This online library offers over 60,000 free eBooks that are in the public domain. From classic literature to historical documents, Project Gutenberg provides a wide range of PDF files that can be downloaded and enjoyed on various devices. The website is user-friendly and allows users to search for specific titles or browse through different categories. Another reliable platform for downloading Implementation Of Mppt Control Using Fuzzy Logic In Solar free PDF files is Open Library. With its vast collection of over 1 million eBooks, Open Library has something for every reader. The website offers a seamless experience by providing options to borrow or download PDF files. Users simply need to create a free account to access this treasure trove of knowledge. Open Library also allows users to contribute by uploading and sharing their own PDF files, making it a collaborative platform for book enthusiasts. For those interested in academic resources, there are websites dedicated to providing free PDFs of research papers and scientific articles. One such website is Academia.edu, which allows researchers and scholars to share their work with a global audience. Users can download PDF files of research papers, theses, and dissertations covering a wide range of subjects. Academia.edu also provides a platform for discussions and networking within the academic community. When it comes to downloading Implementation Of Mppt Control Using Fuzzy Logic In Solar free PDF files of magazines, brochures, and catalogs, Issuu is a popular choice. This digital publishing platform hosts a vast collection of publications from around the world. Users can search for specific titles or explore various categories and genres. Issuu offers a seamless reading experience with its user-friendly interface and allows users to download PDF files for offline reading. Apart from dedicated platforms, search engines also play a crucial role in finding free PDF files. Google, for instance, has an advanced search feature that allows users to filter results by file type. By specifying the file type as "PDF," users can find websites that offer free PDF downloads on a specific topic. While downloading Implementation Of Mppt Control Using Fuzzy Logic In Solar free PDF files is convenient, its important to note that copyright laws must be respected. Always ensure that the PDF files you download are legally available for free. Many authors and publishers voluntarily provide free PDF versions of their work, but its essential to be cautious and verify the authenticity of the source before downloading Implementation Of Mppt Control Using Fuzzy Logic In Solar. In conclusion, the internet offers numerous platforms and websites that allow users to download free PDF files legally. Whether its classic literature, research papers, or magazines, there is something for everyone. The platforms mentioned in this article, such as Project Gutenberg, Open Library, Academia.edu, and Issuu, provide access to a vast collection of PDF files. However, users should always be cautious and verify the legality of the source before downloading Implementation Of Mppt Control Using Fuzzy Logic In Solar any PDF files. With these platforms, the world of PDF downloads is just a click away.

FAQs About Implementation Of Mppt Control Using Fuzzy Logic In Solar Books

How do I know which eBook platform is the best for me? Finding the best eBook platform depends on your reading preferences and device compatibility. Research different platforms, read user reviews, and explore their features before making a choice. Are free eBooks of good quality? Yes, many reputable platforms offer high-quality free eBooks, including classics and public domain works. However, make sure to verify the source to ensure the eBook credibility. Can I read eBooks without an eReader? Absolutely! Most eBook platforms offer web-based readers or mobile apps that allow you to read eBooks on your computer, tablet, or smartphone. How do I avoid digital eye strain while reading eBooks? To prevent digital eye strain, take regular breaks, adjust the font size and background color, and ensure proper lighting while reading eBooks. What the advantage of interactive eBooks? Interactive eBooks incorporate multimedia elements, quizzes, and activities, enhancing the reader engagement and providing a more immersive learning experience. Implementation Of Mppt Control Using Fuzzy Logic In Solar is one of the best book in our library for free trial. We provide copy of Implementation Of Mppt Control Using Fuzzy Logic In Solar in digital format, so the resources that you find are reliable. There are also many Ebooks of related with Implementation Of Mppt Control Using Fuzzy Logic In Solar. Where to download Implementation Of Mppt Control Using Fuzzy Logic In Solar online for free? Are you looking for Implementation Of Mppt Control Using Fuzzy Logic In Solar PDF? This is definitely going to save you time and cash in something you should think about.

Find Implementation Of Mppt Control Using Fuzzy Logic In Solar :

~~lala en la ciudad de las piramides lainfotecasantillana~~
krugman and obstfeld international economics 9th edition
klezmer clarinet
kyambogo university fees structure 2015 16
karl eugen kurrer the history of the theory of structures
la resiliencia crecer desde la adversidad 3rd edition
kundalini divine energy life cyndi dale
karikoga gumi remiseve
~~keilani asmus treats magazine issue 12 2017 team ef~~
land rover discovery tdv6 service manual
~~jose jose esta es mi vida spanish edition by jose jose~~
lab math a handbook of measurements calculations and other quantitative skills for use at the bench second

Implementation Of Mppt Control Using Fuzzy Logic In Solar

edition
kafan munshi premchand
~~klasifikasi phylum chlorophyta kelas chlorophyceae~~
la magia egiziana

Implementation Of Mppt Control Using Fuzzy Logic In Solar :

certification unit saudi petroleum services polytechnic - Jul 02 2022
web saudi aramco contractor certification guide january 2022 revision page7 0 the expiry of the heavy equipment operator certification is as per saudi aramco gi s when assessing any candidates in the performance section of the certifications an instant failure will be given for e g test on cat 16g and cat 14g is present during the
aramco pearson vue - Mar 10 2023
web jan 30 2020 aramco inspector qualification kindly note that quality professionals who wish to be qualified and registered in aramco as an inspectors vendor inspection or project inspection personnel s will first have to apply to aramco for inspectors qualification exam for pre approval
aramco shl assessment test stkfupm منتديات طلاب جامعة الملك فهد - May 12 2023
web aramco shl assessment test الموضوع في أرامكو سابك aramco sabic بواسطة tsu 2021 يونيو 26 بتاريخ
aramco assessment test shl استفسار stkfupm منتديات طلاب جامعة - Oct 05 2022
web 1 0 0 2 ذكر التقييمات t33h3f 28 مارس 2019 السلام عليكم ورحمة الله وبركاته لو سمحتوا عندي كم سؤال بخصوص الاختبار اليوم وترك باقي verbal هل بالامكان اخذه بشكل متفرق بمعنى ان ابدأ مثلا بقسم الـ
saudi aramco assessments interview preparation jobtestprep - Jun 13 2023
web prepare for saudi aramco s tests applying for one of the saudi aramco vacancies will mean having to face several aptitude tests behavioural assessments and interviews jobtestprep has designed a specialized preppack to help you excel during the saudi aramco employment process
saudi aramco assessment test db mwpai edu - Dec 27 2021
web saudi aramco assessment testsaudi aramco s assessment tests to ensure the onboarding of suitable candidates saudi aramco employs the use of many different psychometric and aptitude assessments to evaluate a variety of
online assessment test aramco stkfupm - Jul 14 2023
web please note that upon your completion of this online assessment test and after meeting all saudi aramco employment criteria you will be requested to do a supervised short version of the online assessment test at one of saudi aramco s employment offices in order to verify your scores

Implementation Of Mppt Control Using Fuzzy Logic In Solar

cdpne english math test sample aramco - Sep 04 2022

web saudi aramco public cdpne english math test sample 600 plus international test matches and have scored more points than any other rugby playing nation they are the only international team to have a winning record against every single country they have played and since their international debut in 1903 when the all blacks

aramco assessment tests preparation 2023 practice4me - Aug 15 2023

web aramco s assessments like many companies aramco uses psychometric tests to help narrow the applicant field for some positions these tests are computer based and are used to look for ideal behavioral traits problem solving skills and in some cases basic technical knowledge the tests listed below are a few of the tests commonly given by

saudi aramco interview questions glassdoor - Feb 09 2023

web sep 12 2023 saudi aramco interview details 315 interview questions and 297 interview reviews posted anonymously by saudi aramco interview candidates

اختبار ارامكو shl assessments youtube - Jun 01 2022

web oct 24 2016 اختبار ارامكو shl assessments geo eps 14 videos 70 383 views last updated on oct 24 2016 play all shuffle 1 11 26

aramco 20assessment 20test saudi employment division - Jan 08 2023

web the results of the tests will be combined with your education achievements and work experience if applicable to help saudi aramco make the appropriate hiring decisions this leaflet is designed to help you prepare for the test

aramco test questions with answers pdf concrete - Aug 03 2022

web 1 what is the weight of the sample used in the fine aggregate test soundness 100 g 2 what are the sieves used in finding the passing sample in the fine aggregate test soundness passing retained no 30 no 50 no 16 no 30 no 8 no 16 no 4 no 8 3 8 no 4 3

saudi aramco assessment test ams istanbul edu tr - Mar 30 2022

web saudi aramco assessment test 3 3 for certification unitsaudi aramco s status as an oil producing behemoth located in one of the world s most turbulent regions always marked it as likely to suffer bouts of volatility saudi aramco news first

safety evaluation test questions short test officers saudi aramco - Apr 30 2022

web jul 10 2021 hsestudyguide

aramco assessment stkfupm منتديات طلاب جامعة الملك فهد للبترول والمعادن - Apr 11 2023

web aramco shl assessment test tsu 26 يونيو 2021 في منتدى أرامكو سابك aramco sabic الردود

aramco test for hse safety officers saudi arabia for aramco youtube - Jan 28 2022

web 27k views 2 years ago aramco test for safety officers after watch this video you are able to appear in aramco written test

before you appear in interview you must have to pass written test with
saudi applicants aramco - Nov 06 2022
web we are looking for graduates and experienced professionals in a wide range of fields including engineering geosciences drilling research and development as well as education finance law and other administrative areas start here to build a rewarding and long lasting career with us
cdpne english math test sample □□□□□□□□□ aramco - Dec 07 2022
web english math test sample saudi aramco public 17 5 find the 5th term of a geometric sequence if its first term is 27 and its common ratio is 1 3 a 1 3 b 1 9 c 1 9 d 1 3 6 find the value of b for which the diameter of the circle x y x y b22 4 6 20
25 saudi aramco safety evaluation test questions short test - Feb 26 2022
web 5 cigarette smoking is forbidden anywhere on saudi aramco construction site except in designated and approved smoking shelter a true b false 6 holes may be drilled into sides of hard hats to provide for cross ventilation air flow during very hot weather a
proof of life a christian romance blackthorpe - Aug 17 2023
web jun 20 2016 proof of life a christian romance blackthorpe security jordan kimberly rae on amazon com free shipping on qualifying offers proof of life a
sermons about proof of love sermoncentral com - Feb 28 2022
web free access to sermons on proof of love church sermons illustrations on proof of love and preaching slides on proof of love christian church 1912 christian
proof of life a christian romance blackthorpe security - Apr 13 2023
web sell buy or rent proof of life a christian romance blackthorpe security 9781988409016 1988409012 we buy used or new for best buyback price with free
proof of life a christian romance blackthorpe sec pdf - Jun 03 2022
web grows hotter by the second caleb s past has left him with a hard heart and a mistrustful nature and it was at her sister s hands that jake was killed but with his brother s life in
proof of life a christian romance paperback barnes noble - Feb 11 2023
web jun 20 2016 ever since leaving the military alexander thorpe has devoted his life to blackthorpe security the company he founded with his best friend marcus black
proof of life a christian romance blackthorpe sec - Aug 05 2022
web proof of proofs they live the case for heaven herald of gospel liberty evidence for christianity truth and proof for the christian worldview a comprehensive summary

proof of life a christian romance blackthorpe sec - Jul 04 2022
web apr 15 2023 you could purchase guide proof of life a christian romance blackthorpe sec or get it as soon as feasible you could quickly download this proof of life a
proof of life a christian romance blackthorpe sec - May 02 2022
web jun 29 2023 this proof of life a christian romance blackthorpe sec as one of the most practicing sellers here will enormously be in the middle of the best options to review
proof of life a christian romance blackthorpe - May 14 2023
web proof of life is book four of the christian romance series blackthorpe security by kimberly rae jordan follow the lives of the men and women working for
proof of life a christian romance blackthorpe sec full pdf - Dec 09 2022
web proof of life a christian romance blackthorpe sec christ the central evidence of christianity and other present day tracts a manual of christian evidence the case for
home proof of love - Jan 30 2022
web apr 23 2021 technology is changing our lives at a dizzying pace but we still crave human connections and love each friday musician and crypto personality tatiana moroz and
proof of life a christian romance blackthorpe security book - Nov 27 2021
web mar 7 2016 proof of life a christian romance blackthorpe security book 4 ebook jordan kimberly rae amazon ca books
proof of life a christian romance blackthorpe sec book - Jan 10 2023
web proof of life a christian romance blackthorpe sec recognizing the quirk ways to get this book proof of life a christian romance blackthorpe sec is additionally useful
proof of life a christian romance blackthorpe sec copy - Nov 08 2022
web aug 2 2023 proof of life a christian romance blackthorpe sec book review unveiling the magic of language in an electronic digital era where connections and
proof of life a christian romance blackthorpe sec andrey - Oct 07 2022
web the simple fact of the matter is that iris loves life maybe she s forgotten that sometimes that happens doesn t it to the best of us all i have to do is remind her of that one
amazon com customer reviews proof of life a christian - Mar 12 2023
web find helpful customer reviews and review ratings for proof of life a christian romance blackthorpe security book 4 at amazon com read honest and unbiased product
proof of love song and lyrics by the prophecy spotify - Apr 01 2022

web the prophecy song 2015

blackthorpe security 6 book series kindle edition - Jun 15 2023

web proof of life beauty from ashes a sense of security if you enjoy heartwarming christian romance with a focus on love faith and family be sure to check out these other books

proof of life a christian romance blackthorpe sec pdf - Sep 06 2022

web mar 4 2023 proof of life a christian romance blackthorpe sec 2 10 downloaded from uniport edu ng on march 4 2023 by guest like it clever world building intense

proof of life a christian romance blackthorpe sec book - Dec 29 2021

web right here we have countless ebook proof of life a christian romance blackthorpe sec and collections to check out we additionally pay for variant types and also type of

proof of life a christian romance blackthorpe security book 4 - Jul 16 2023

web mar 7 2016 proof of life is book four of the christian romance series blackthorpe security by kimberly rae jordan follow the lives of the men and

proof of life blackthorpe security 4 goodreads - Sep 18 2023

web kimberly rae jordan 4 60 827 ratings40 reviews proof of life is book four of the christian romance series blackthorpe security by kimberly rae jordan

textbooks pdf i xii ncert - Nov 11 2022

web ncert sri aurobindo marg new delhi 110016 dceta ncert nic in 91 8800440559 91 8448440632

cbse class 12 chemistry practical syllabus 2023 cbse - Jul 27 2021

web cbse class 12 chemistry practical syllabus cbse class 12 syllabus for chemistry practical exam is available here students will find complete details related to practical exams including an evaluation scheme list of experiments projects work etc

chemistry practical class 12 understand the concepts better - Oct 10 2022

web sep 16 2023 the cbse class 12 chemistry practical syllabus is divided into two sections a and b section a consists of different experiments that students are required to perform during the practical exam the experiments include topics such as qualitative analysis salt analysis and volumetric analysis

new chemistry practical xii2023 24 studocu - Nov 30 2021

web new chemistry practical xii2023 24 experiment no 1 preparation of 250 ml m 20 ferrous ammonium studocu south point high school students shared 128 documents in this course cbse class x economics ch 2 sectors of the indian economy one mark questions liberalism by andrew heywood notes for eco development x

titration of oxalic acid with kmno4 chemistry practicals class 12 - Sep 28 2021

web cbse class 12 chemistry practical titration of oxalic acid with kmno4 titration of oxalic acid with kmno4 table of contents aim theory materials required apparatus setup procedure observation calculations results and

chemistry practical book class 12 pdf titration chemistry - Aug 08 2022

web chemistry practical book class 12 pdf titration chemistry 0 ratings 135 views 77 pages chemistry practical book class 12 uploaded by hendra gupta description this is the practicals of class 12 cbse of the year 2020 21 experiments contain aim materials required procedure observations and result conclusion copyright

chemistry code no 043 xi xii 2023 24 rationale - Feb 02 2022

web unit i some basic concepts of chemistry 12 periods general introduction importance and scope of chemistry nature of matter laws of chemical combination dalton s atomic theory concept of elements atoms and molecules

laboratory manual chemistry ncert - Jun 06 2022

web present laboratory manual will be complementary to the textbook of chemistry for class xi it is in continuation to the ncert s efforts to improve upon comprehension of concepts and practical skills among students the purpose of this manual is not only to convey the approach and philosophy of the practical

cbse chemistry lab manual class 12 for practical exam byju s - Aug 20 2023

web cbse chemistry practical class 12 covers the list of practicals experiments and activities to be performed for the exam also get the chemistry lab manual class 12 which help you in performing the experiments and suggest you the project work

chemistry practical record full cbse class 12 pdf slideshare - May 05 2022

web feb 22 2016 chemistry practical record full cbse class 12 download as a pdf or view online for free

how to ace chemistry practical in class 12th leverage edu - Jul 07 2022

web nov 27 2020 list of experiments for chemistry practical in class 12th important tips tricks for acing your chemistry practical master your conceptual understanding of each experiment remember the stepwise procedure avoid mugging up experiments readings take help of visuals diagrams viva questions for chemistry practical

cbse class 12 chemistry lab manual learn cbse - Jun 18 2023

web cbse class 12 chemistry lab manual introduction to basic laboratory equipment viva questions with answers surface chemistry exp 2 1 to prepare colloidal solution sol of starch exp 2 2 to prepare a colloidal solution of gum exp 2 3 to prepare colloidal solution or sol of egg albumin

class 12 cbse 2023 chemistry practical youtube - Sep 09 2022

web class 12 cbse 2023 chemistry practical how to score full marks in chemistry practical chemistry practical by bharat panchal sir youtube com pla

class 12 chemistry index byju s - Jan 01 2022

web this class 12 chemistry index page contains all the topics that fall under each chapter of the class 12 chemistry syllabus as per the ncert textbook students may follow the links on the subtopics to access free study material on the associated concepts prepared by chemistry subject experts for cbse students

cbse class 12 chemistry practical syllabus 2023 24 class 12th - Mar 03 2022

web apr 11 2023 cbse class 12 chemistry practical syllabus 2024 in this article students can check the complete syllabus of cbse board s 12th class chemistry talking about the syllabus of

systematic analysis of cations chemistry practicals class 12 - Aug 28 2021

web cbse class 12 chemistry practical systematic analysis of cations systematic analysis of cations analysis of metallic elements in compounds or samples is an integral part of chemical research

cbse chemistry practicals and experiments updated for 2023 - Jul 19 2023

web cbse chemistry practicals and experiments list of chemistry practicals and experiments with detailed instructions safety advice and background information chemistry practical class 12 11 10 and 9 covers the list of practicals experiments and activities to be performed for the exam

systematic analysis of anions chemistry practicals class 12 - Feb 14 2023

web cbse class 12 chemistry practical systematic analysis of anions systematic analysis of anions inorganic salts can be obtained with a base through complete or partial neutralization of acid the part that the acid contributes is called anion in the formation of a salt and the part that the base contributes is called cation

bihar board class 12 chemistry practical question paper 2023 - Oct 30 2021

web 2 days ago bihar board class 12 chemistry practical question paper 2023 with answer key pdf is available for download here the exam was conducted by bihar school examination board bseb the question paper comprised a total of 5 questions divided among sections bihar board class 12 chemistry practical question paper 2023 with

mohr salt titration with kmno4 cbse chemistry practicals class 12 - Mar 15 2023

web cbse class 12 chemistry practical mohr salt titration with kmno4 mohr salt titration with kmno 4 table of contents aim theory materials required apparatus setup procedure observations calculations results and discussion precautions viva questions

ncert - Jan 13 2023

web exercise 12 13 exercise 14 exercise 15 exercise 16 to 20 exercise 21 exercise 22 to 24 exercise 25 investigatory project work physics introduction to major skills in physics practical work experiment 1 2 experiment 3 experiment 4 experiment 5 experiment 6 7 experiment 8 9 experiment 10 experiment 11 to 13 experiment

cbse class 12 chemistry practicals 2022 collegedunia - May 17 2023

web cbse class 12 chemistry practical 2022 has been conlcuded for term 2 exam all the schools have sent the marks to the board as directed term 2 chemistry practical carried a total of 15 marks including all four sections the written exam will carry 35 marks and all questions will be subjective

cbse class 12 chemistry practical syllabus 2022 23 pdf - Apr 16 2023

web dec 26 2022 we have provided here the cbse class 12 chemistry practical syllabus 2022 2023 for students to download in pdf with this latest syllabus students would get to know the practical

cbse class 12 chemistry practical file record 2021 22 slideshare - Apr 04 2022

web aug 22 2021 cbse class 12 chemistry practical file record 2021 22 aug 22 2021 0 likes 37 987 views poojareddy530263 follow science practical file record of chemistry with all experiments written for ccbse class 12 2021 2022 cbse class 12 chemistry practical file record 2021 22 1 of 28 download now

chemistry practical class 12 sciencemotive - Dec 12 2022

web sep 7 2021 chemistry practical class 12 titration or volumetric analysis aim to prepare m 50 oxalic acid solution and determine the molarity strength of the given potassium permanganate solution theory in this titration oxalic acid acts as a reducing agent and potassium permanganate acts as an oxidising agent