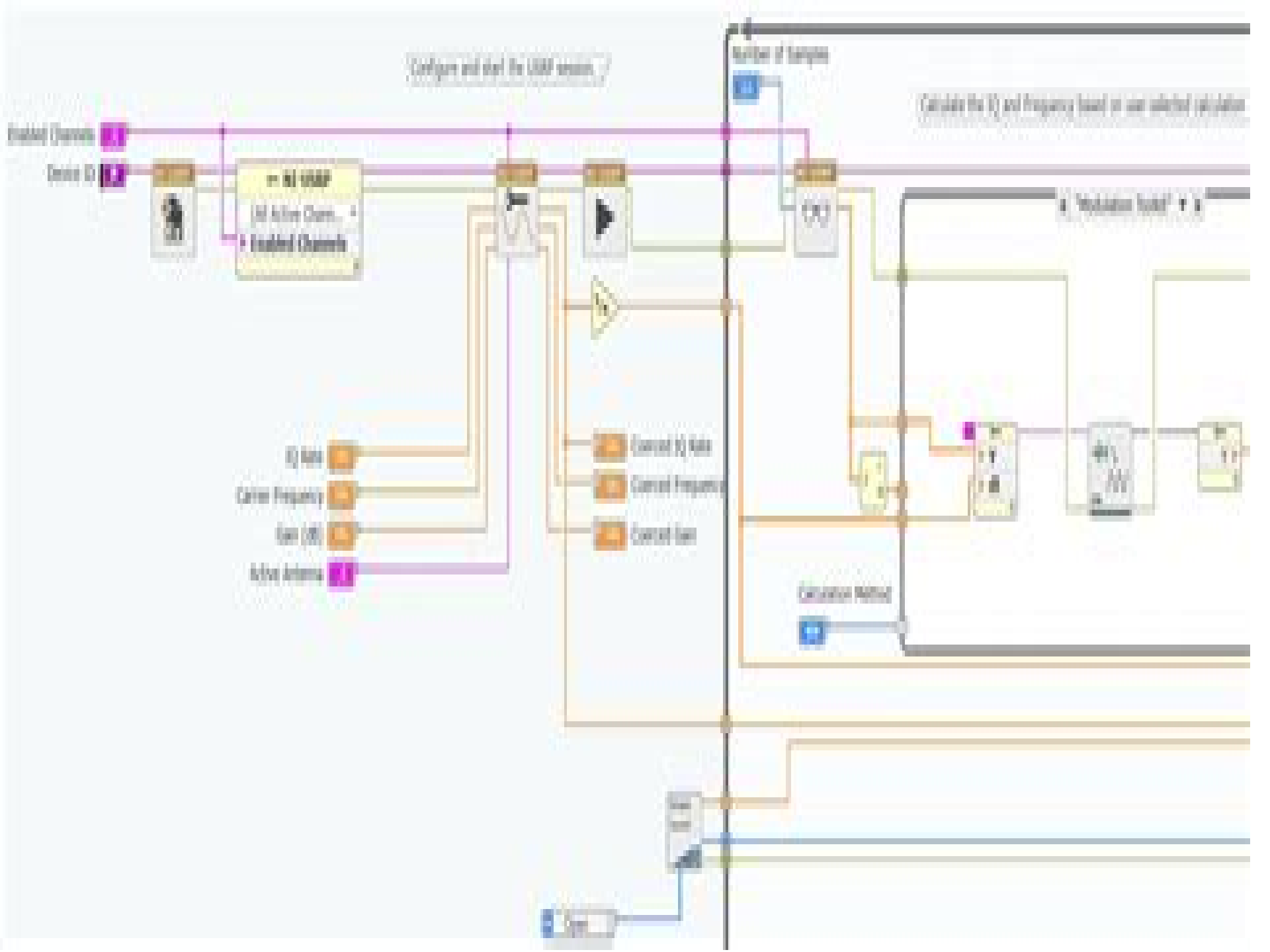
Configure and start the USRP session
Number of Samples
Calculate the EQ and Frequency based on user selected calculation
Enabled Channels
Device ID
NI USRP
Enabled Channels
"Modulation Toolkit"
EQ Rate
Carrier Frequency
Gain (dB)
Active Antenna
Coerced EQ Rate
Coerced Frequency
Coerced Gain
Calculation Method

Ni Usrp And Labview

LP Steffe

Ni Usrp And Labview:

Power Engineering and Intelligent Systems Vivek Shrivastava,Jagdish Chand Bansal,Bijaya Ketan Panigrahi,2026-02-12 This book presents a collection of the high quality research articles in the field of power engineering grid integration energy management soft computing artificial intelligence signal and image processing data science techniques and their real world applications This book is presented at International Conference on Power Engineering and Intelligent Systems PEIS 2025 held during March 8 9 2025 at National Institute of Technology Srinagar Uttarakhand India This book is presented in two volumes **Inventive Computation Technologies** S. Smys,Robert Bestak,Álvaro Rocha,2019-11-02 With the intriguing development of technologies in several industries along with the advent of ubiquitous computational resources there are now ample opportunities to develop innovative computational technologies in order to solve a wide range of issues concerning uncertainty imprecision and vagueness in various real life problems The challenge of blending modern computational techniques with traditional computing methods has inspired researchers and academics alike to focus on developing innovative computational techniques In the near future computational techniques may provide vital solutions by effectively using evolving technologies such as computer vision natural language processing deep learning machine learning scientific computing and computational vision A vast number of intelligent computational algorithms are emerging along with increasing computational power which has significantly expanded the potential for developing intelligent applications These proceedings of the International Conference on Inventive Computation Technologies ICICT 2019 cover innovative computing applications in the areas of data mining big data processing information management and security *Simulation Tools and Techniques* Houbing Song,Dingde Jiang,2021-04-26 This two volume set constitutes the refereed post conference proceedings of the 12th International Conference on Simulation Tools and Techniques SIMUTools 2020 held in Guiyang China in August 2020 Due to COVID 19 pandemic the conference was held virtually The 125 revised full papers were carefully selected from 354 submissions The papers focus on simulation methods simulation techniques simulation software simulation performance modeling formalisms simulation verification and widely used frameworks

Spectrum Access and Management for Cognitive Radio Networks Mohammad A Matin,2016-09-16 This book presents cutting edge research contributions that address various aspects of network design optimization implementation and application of cognitive radio technologies It demonstrates how to make better utilization of the available spectrum cognitive radios and spectrum access to achieve effective spectrum sharing between licensed and unlicensed users The book provides academics and researchers essential information on current developments and future trends in cognitive radios for possible integration with the upcoming 5G networks In addition it includes a brief introduction to cognitive radio networks for newcomers to the field **Chaotic Signals in Digital Communications** Marcio Eisencraft,Romis Attux,Ricardo Suyama,2013-10-25 Chaotic Signals in Digital Communications combines fundamental background knowledge with state of

the art methods for using chaotic signals and systems in digital communications The book builds a bridge between theoretical works and practical implementation to help researchers attain consistent performance in realistic environments It shows the possible shortcomings of the chaos based communication systems proposed in the literature particularly when they are subjected to non ideal conditions It also presents a toolbox of techniques for researchers working to actually implement such systems A Combination of Tutorials and In Depth Cutting Edge Research Featuring contributions by active leading researchers the book begins with an introduction to communication theory dynamical systems and chaotic communications suitable for those new to the field This lays a solid foundation for the more applied chapters that follow A Toolbox of Techniques Including New Ways to Tackle Channel Imperfections The book covers typical chaos communication methods namely chaotic masking chaotic modulation chaotic shift key and symbolic message bearing as well as bidirectional communication and secure communication It also presents novel methodologies to deal with communication channel imperfections These tackle band limited channel chaos communication radio channels with fading and the resistance of a special chaotic signal to multipath propagations In addition the book addresses topics related to engineering applications such as optical communications chaotic matched filters and circuit implementations and microwave frequency modulated differential chaos shift keying FM DCSK systems Insights for Both Theoretical and Experimental Researchers Combining theory and practice this book offers a unique perspective on chaotic communication in the context of non ideal conditions Written for theoretical and experimental researchers it tackles the practical issues faced in implementing chaos based signals and systems in digital communications applications **Advances in Wireless Communications and Applications** Roumen Kountchev,Aniket Mahanti,Shen Chong,Srikanta Patnaik,Margarita Favorskaya,2020-09-03 This book features selected papers presented at the 3rd International Conference on Wireless Communications and Applications ICWCA 2019 held at Hainan University China Focusing on applications of the latest smart theories and approaches and recent advances in the field it covers topics such as OFDM and multi carrier techniques smart antenna and space time signal processing MIMO multi user MIMO and massive MIMO modulation coding and diversity techniques dynamic spectrum access and cognitive radio interference management and radio resource allocation equalization techniques synchronization estimation and detection techniques and wireless multiple access e g CDMA OFDMA NOMA Programming with LabVIEW 2012 Gaurav Soni,2017-03-30 LabVIEW is a software for real time as well as software based simulation of any real time application like testing of Wi Fi signals analysis of WiMAX WCDMA LTE using hardware such as USRP Universal Software Radio Peripheral VST Vector Signal Transceivers etc It is a program development application that uses graphical programming language G to create programs in block diagram form Execution is determined by the structure of a graphical block diagram on which the programmer connects different function nodes by drawing wires This book is based upon LABVIEW and dedicated hardware like USRP and VST The course contents are as follows Fundamentals of LABVIEW Examples Debugging Methods and

techniques Run Tools Probe for values highlight execution Changing displaying values via front panel etc control indicators Create a VI Connector Adding Removing input output modes Loops arrays case structure in LabVIEW LABVIEW based projects Demonstration of the simplest form of data acquisition Building Communication System using USRP USRP based project implementation on wireless communication Organization of data acquisition VIs that lists the various types of VI s Design and implementation of 3Gand 4G technologies like WCDMA LTE WiMAX using Vector Signal transceiver VST

FPGA-Based Software-Defined Radio and Its Real-Time Implementation Using NI-USRP Nikhil Marriwala,2017 In this chapter we propose a novel design of scalable and real time data acquisition software architecture for software defined radio SDR using universal software radio peripheral USRP The software has been designed and tested in multi thread model using LabVIEW which guarantees real time performance and efficiency With the help of this design we have been able to improve the stability of the system besides providing a reconfigurable and flexible architecture Wireless transfer of sensitive data using communication is not a very safe option In this chapter we aim to provide a safe and private wireless transmission between two terminals using the SDR approach and verifying the results in real world environment with the use of USRP The novel design being presented here can be used to transfer random data text or an image encoded with different forward error correction FEC codes which is then verified at the receiving terminal and then decoded accordingly to produce the desired result **LabVIEW for Data Acquisition** Bruce Mihura,2001-06-26 The practical succinct LabVIEW data acquisition tutorial for every professional No matter how much LabVIEW experience you have this compact tutorial gives you core skills for producing virtually any data acquisition DAQ application input and output Designed for every engineer and scientist LabVIEW for Data Acquisition begins with quick start primers on both LabVIEW and DAQ and builds your skills with extensive code examples and visual explanations drawn from Bruce Mihura s extensive experience teaching LabVIEW to professionals Includes extensive coverage of DAQ specific programming techniques Real world techniques for maximizing accuracy and efficiency The 10 most common LabVIEW DAQ development problems with specific solutions Addresses simulation debugging real time issues and network distributed systems Preventing unauthorized changes to your LabVIEW code An overview of transducers for a wide variety of signals Non NI alternatives for hardware and software LabVIEW for Data Acquisition includes an extensive collection of real world LabVIEW applications lists of LabVIEW tips and tricks coverage of non NI software and hardware alternatives and much more Whatever data acquisition application you need to create this is the book to start and finish with RELATED WEBSITE The accompanying website includes an evaluation version of LabVIEW and key LabVIEW code covered in the book *Learning by Doing with National Instruments Development Boards* Jivan Shrikrishna Parab,Ingrid Anne Nazareth,Rajendra S. Gad,Gourish Naik,2020-05-20 Learning by Doing with National Instruments Development Boards starts with a brief introduction to LabVIEW programming which is required to explore the National Instrument platform an introduction that includes detailed installation and licensing setup Further it

gives the features and configuration setup of NI SPEEDY 33 NI ELVIS and myRIO boards The focus of the book is on worked out case studies for students working in different areas of electronics such as basic digital design biomedical instrumentation sensors and measurement Data acquisition using SPEEDY 33 NI ELVIS and myRIO kits is also odiscussed The book also examines the myRIO platform *LabVIEW for Everyone* Jeffrey Travis,2002 **LabVIEW Graphical Programming, Fifth Edition** Richard Jennings,2019-11-15 LabVIEW programming techniques tips and practices Learn to build effective LabVIEW programs using the detailed information contained in this thoroughly revised resource This edition updates all content to align with the latest version and adds new chapters that clearly explain object oriented programming methods and programming in teams using the cloud LabVIEW Graphical Programming Fifth Edition begins with basics for beginners and quickly progresses to intermediate and advanced programming techniques Written by a pair of LabVIEW experts this hands on guide shows how to work with data types start building your own applications handle I O and use the DAQmix library You will also find out how to build applications that communicate with enterprise message brokers and with Amazon Web Services Internet of Things IoT message broker Coverage includes The origin and evolution of LabVIEW LabVIEW programming fundamentals Data acquisition Object oriented programming in LabVIEW Frameworks including the Delacor Queued Message Handler DQMH and Actor Framework Unit testing Enterprise and IoT messaging Programming in teams using the cloud *Engineering Project with Ni LabVIEW and Vernier* Michele Perrin,Steve Decker,Sam Swartley,David Vernier,2011-02-01 Learning by Doing with National Instruments Development Boards Jivan Shrikrishna Parab,Taylor & Francis Group,Ingrid Anne Nazareth,Rajendra S Gad,Gourish Naik,2022-02 This book starts with brief introduction of LabVIEW programming with detailed installation and licensing setup It explains features and configuration setup of NI SPEEDY 33 ELCIS and MYRio Boards with case studies pertaining to different areas of electronics Graphical approach aids to build programs by dragging dropping virtual representations **Image Acquisition and Processing with LabVIEW** Christopher G. Relf,2003-07-28 Image Acquisition and Processing With LabVIEW combines the general theory of image acquisition and processing the underpinnings of LabVIEW and the NI Vision toolkit examples of their applications and real world case studies in a clear systematic and richly illustrated presentation Designed for LabVIEW programmers it fills a significant gap in the technical literature by providing a general training manual for those new to National Instruments NI Vision application development and a reference for more experienced vision programmers The downloadable resources contain libraries of the example images and code referenced in the text additional technical white papers a demonstration version of LabVIEW 6 0 and an NI IMAQ demonstration that guides you through its features System Requirements Using the code provided on the downloadable resources requires LabVIEW 6 1 or higher and LabVIEW Vision Toolkit 6 1 or higher Some of the examples also require IMAQ Vision Builder 6 1 or higher the IMAQ OCR toolkit and IMAQ 1394 drivers *LabVIEW for Everyone* Travis,2006 **Engineering Projects with Ni LabView and Vernier** Michele Perrin,Steve

Decker,Sam Swartley,David Vernier,2013-06-01 **Engineering Projects with Ni LabView and Vernier** Michele Perrin,Steve Decker,Sam Swartley,Vernier Dave,2014-08 *Hands-on Introduction to Ni LabVIEW with Vernier* Sam Swartley,Erik Schmidt,2010-01-01 *LabVIEW for Everyone* Jeffrey Travis,2009

Fuel your quest for knowledge with Authored by is thought-provoking masterpiece, Dive into the World of **Ni Usrp And Labview** . This educational ebook, conveniently sized in PDF (*), is a gateway to personal growth and intellectual stimulation. Immerse yourself in the enriching content curated to cater to every eager mind. Download now and embark on a learning journey that promises to expand your horizons. .

https://db1.greenfirefarms.com/book/publication/Documents/matematica%20financeira%20editora%20atlas%20washington%20franco%20mathias%20jose%20maria%20gomes.pdf

Table of Contents Ni Usrp And Labview

1. Understanding the eBook Ni Usrp And Labview
    - The Rise of Digital Reading Ni Usrp And Labview
    - Advantages of eBooks Over Traditional Books
2. Identifying Ni Usrp And Labview
    - Exploring Different Genres
    - Considering Fiction vs. Non-Fiction
    - Determining Your Reading Goals
3. Choosing the Right eBook Platform
    - Popular eBook Platforms
    - Features to Look for in an Ni Usrp And Labview
    - User-Friendly Interface
4. Exploring eBook Recommendations from Ni Usrp And Labview
    - Personalized Recommendations
    - Ni Usrp And Labview User Reviews and Ratings
    - Ni Usrp And Labview and Bestseller Lists
5. Accessing Ni Usrp And Labview Free and Paid eBooks
    - Ni Usrp And Labview Public Domain eBooks
    - Ni Usrp And Labview eBook Subscription Services

- Ni Usrp And Labview Budget-Friendly Options
6. Navigating Ni Usrp And Labview eBook Formats
   - ePub, PDF, MOBI, and More
   - Ni Usrp And Labview Compatibility with Devices
   - Ni Usrp And Labview Enhanced eBook Features
7. Enhancing Your Reading Experience
   - Adjustable Fonts and Text Sizes of Ni Usrp And Labview
   - Highlighting and Note-Taking Ni Usrp And Labview
   - Interactive Elements Ni Usrp And Labview
8. Staying Engaged with Ni Usrp And Labview
   - Joining Online Reading Communities
   - Participating in Virtual Book Clubs
   - Following Authors and Publishers Ni Usrp And Labview
9. Balancing eBooks and Physical Books Ni Usrp And Labview
   - Benefits of a Digital Library
   - Creating a Diverse Reading Collection Ni Usrp And Labview
10. Overcoming Reading Challenges
    - Dealing with Digital Eye Strain
    - Minimizing Distractions
    - Managing Screen Time
11. Cultivating a Reading Routine Ni Usrp And Labview
    - Setting Reading Goals Ni Usrp And Labview
    - Carving Out Dedicated Reading Time
12. Sourcing Reliable Information of Ni Usrp And Labview
    - Fact-Checking eBook Content of Ni Usrp And Labview
    - Distinguishing Credible Sources
13. Promoting Lifelong Learning
    - Utilizing eBooks for Skill Development
    - Exploring Educational eBooks
14. Embracing eBook Trends

- Integration of Multimedia Elements
- Interactive and Gamified eBooks

Ni Usrp And Labview Introduction

In the digital age, access to information has become easier than ever before. The ability to download Ni Usrp And Labview has revolutionized the way we consume written content. Whether you are a student looking for course material, an avid reader searching for your next favorite book, or a professional seeking research papers, the option to download Ni Usrp And Labview has opened up a world of possibilities. Downloading Ni Usrp And Labview provides numerous advantages over physical copies of books and documents. Firstly, it is incredibly convenient. Gone are the days of carrying around heavy textbooks or bulky folders filled with papers. With the click of a button, you can gain immediate access to valuable resources on any device. This convenience allows for efficient studying, researching, and reading on the go. Moreover, the cost-effective nature of downloading Ni Usrp And Labview has democratized knowledge. Traditional books and academic journals can be expensive, making it difficult for individuals with limited financial resources to access information. By offering free PDF downloads, publishers and authors are enabling a wider audience to benefit from their work. This inclusivity promotes equal opportunities for learning and personal growth. There are numerous websites and platforms where individuals can download Ni Usrp And Labview. These websites range from academic databases offering research papers and journals to online libraries with an expansive collection of books from various genres. Many authors and publishers also upload their work to specific websites, granting readers access to their content without any charge. These platforms not only provide access to existing literature but also serve as an excellent platform for undiscovered authors to share their work with the world. However, it is essential to be cautious while downloading Ni Usrp And Labview. Some websites may offer pirated or illegally obtained copies of copyrighted material. Engaging in such activities not only violates copyright laws but also undermines the efforts of authors, publishers, and researchers. To ensure ethical downloading, it is advisable to utilize reputable websites that prioritize the legal distribution of content. When downloading Ni Usrp And Labview, users should also consider the potential security risks associated with online platforms. Malicious actors may exploit vulnerabilities in unprotected websites to distribute malware or steal personal information. To protect themselves, individuals should ensure their devices have reliable antivirus software installed and validate the legitimacy of the websites they are downloading from. In conclusion, the ability to download Ni Usrp And Labview has transformed the way we access information. With the convenience, cost-effectiveness, and accessibility it offers, free PDF downloads have become a popular choice for students, researchers, and book lovers worldwide. However, it is crucial to engage in ethical downloading practices and prioritize personal security when utilizing online platforms. By doing so, individuals can make the most of the vast array of free PDF

resources available and embark on a journey of continuous learning and intellectual growth.

FAQs About Ni Usrp And Labview Books

How do I know which eBook platform is the best for me? Finding the best eBook platform depends on your reading preferences and device compatibility. Research different platforms, read user reviews, and explore their features before making a choice. Are free eBooks of good quality? Yes, many reputable platforms offer high-quality free eBooks, including classics and public domain works. However, make sure to verify the source to ensure the eBook credibility. Can I read eBooks without an eReader? Absolutely! Most eBook platforms offer web-based readers or mobile apps that allow you to read eBooks on your computer, tablet, or smartphone. How do I avoid digital eye strain while reading eBooks? To prevent digital eye strain, take regular breaks, adjust the font size and background color, and ensure proper lighting while reading eBooks. What the advantage of interactive eBooks? Interactive eBooks incorporate multimedia elements, quizzes, and activities, enhancing the reader engagement and providing a more immersive learning experience. Ni Usrp And Labview is one of the best book in our library for free trial. We provide copy of Ni Usrp And Labview in digital format, so the resources that you find are reliable. There are also many Ebooks of related with Ni Usrp And Labview. Where to download Ni Usrp And Labview online for free? Are you looking for Ni Usrp And Labview PDF? This is definitely going to save you time and cash in something you should think about.

Find Ni Usrp And Labview :

matematica financeira editora atlas washington franco mathias jose maria gomes
maths in focus extension 1 worked solutions
mary garrison how to try a spirit
maua mazuri ya mapenzi picha franty
mathematical methods for physicists weber 7th edition solution manual pdf
massey ferguson service mf 4200 series mf 4215 mf 4220 mf 4225 mf 4233 mf 4235 mf 4243 mf 4245 mf 4253 mf 4255 mf 4260 mf 4263 mf 4270 manual complete tractor workshop manual shop repai
manuale di teoria scuola guida
mcconnell brue economics 15th edition chapter answers
mazda 6 2004 factory full service repair

manuale patente b 2016
maze runner the scorch trials
mastercam post processor
mcqs organizational behavior in education 15th edition
~~manual taller honda cbf 600 download~~
manual toyota starlet pdf

Ni Usrp And Labview :

25.2 Nuclear Transformations Flashcards Study with Quizlet and memorize flashcards containing terms like Band of stability, Positron, Half-life and more. Nuclear Chemistry Chapter 25 (25.2, 25.3, 25.4) Worksheet ... Pearson Chemistry; Nuclear Chemistry Chapter 25 (25.2, 25.3, 25.4) Worksheet Answers. ... Chapter 25.2-Nuclear Transformations vocabulary and key concepts. 9 ... Nuclear Chemistry 2. The three types of nuclear radiation are radiation, radiation, and radiation. 25.2 Nuclear Transformations. 25.2 Nuclear Transformations Carbon-14 emits beta radiation and decays with a half-life (t1/2) of 5730 years. Assume you start with a mass of 2.00 10 12 g of carbon-14. a. How long is ... ECON101 - Ch.25 Section Review Answers For the electronic transition from n = 3 to n = 5 in the hydrogen atom. a) Calculatethe energy. b) Calculate the wavelength (in nm). Chapter 25 Nuclear Chemistry 25.2 Nuclear Transformations Sep 5, 2017 — Nuclear Chemistry Targets: 1.I CAN Utilize appropriate scientific vocabulary to explain scientific concepts. 2.I CAN Distinguish between fission ... Matter and Change • Chapter 25 When a radioactive nucleus gives off a gamma ray, its atomic number increases by. 12. The three types of radiation were first identified by Ernest Rutherford. Nuclear Chemistry - Lake Central High School Jul 12, 2015 — What is the change in atomic number after the alpha decay?It decreases by 2.b. ... answer the following questions.Nuclear ... 25.2 Nuclear Transformations | Lecture notes Chemistry These nuclei decay by turning a neutron into a pro- ton to emit a beta particle (an electron) from the nucleus. This process is known as beta emission. It ... 60 s - 1 min SECTION 25.2 NUCLEAR TRANSFORMATIONS. 1. Write a nuclear equation for the following radioactive processes. a. alpha decay of francium-208 208 Fr→ b ... Kia K2700 Workshop Repair Manual - Pinterest Kia K2700 Workshop Repair Manual Download, PDF Workshop Manual for Professional & Home Repair, Fix, Service, Wiring Diagrams, Engine Repair, ... Repair manuals and video tutorials on KIA K2700 Repair manuals and video tutorials on KIA K2700 · Step-by-step DIY KIA K2700 repair and maintenance · KIA K2700 tips and tricks video tutorials · KIA K2700 PDF ... k2900 & k2700 manual - Kia Forum Jul 17, 2012 — Hi, great site heaps of tips, my problem is finding a detailed manual on the k2700 and k2900, ive spent hours trying to find one on google ... KIA K2400/K2500/K2700/K3000/K3600/Bongo Workshop ... Kia K2500 / K2700 / K2900 / K3000 Workshop and Repair Manuals PDF. These manuals discuss in detail all the most critical issues

related to the repair, ... Kia K2700 Repair & Service Manuals (3 PDF's - Onlymanuals Kia K2700 workshop manual covering Lubricants, fluids and tyre pressures; Kia K2700 service PDF's covering routine maintenance and servicing; Detailed Kia K2700 ... Workshop Manual Kia K2500/K2700 / Bongo / Besta - eBay No design template Workshop manual / repair manual original Kia Kia K 2500 / K 2700 / Bongo / Besta Content: Technical data, setting, installation, removal, ... Manual | Service | Kia Sudan Looking for the manual of your favourite Kia Car, SUV, MPV or even Commercial Vehicles? Just select your Kia car & get access to its authorized manual. KIA Towner K2700 K3000 Workshop Service & Repair ... Every single element of service, repair and maintenance is included in this fully updated workshop manual. From basic repair procedures to a full engine rebuild ... Kia K2700 II 2000 to 2005 Repair Manual ... - Autobooks Kia K2700 II 2000 to 2005 Repair Manual. This is a Electronic downloadable Product. Engine: J2 2.7L (2665cc) 4-Cyl 59Kw Diesel. Workshop Manual Contents:. KIA Truck Service ans Repair Manual - Free Download pdf ... Kia Bongo 3 Service Manual · Kia Bongo III Repair Manual · Kia K2500 Service Manual · Kia K2700 Service Manual · Kia K2900 Service Manual · Download. Kia Bongo ... Biochemistry and Genetics Pretest Self-Assessment and ... Biochemistry and Genetics Pretest Self-Assessment and Review 5/E. 5th Edition ... BASIC BIOCHEMISTRY AND GENETICS: CONCEPTS OF MOLECULAR MEDICINE Acid-Base ... Biochemistry and Genetics Pretest... by Wilson, Golder Great for course review and the USMLE Step 1, PreTest asks the right questions so you'll know the right answers. You'll find 500 clinical-vignette style ... Biochemistry and Genetics PreTest The new edition of Biochemistry and Genetics PreTest: Self-Assessment and. Review is ... Each PreTest Self-Assessment and Review allows medical students to com-. Biochemistry and Genetics PreTest™... by Wilson,Golder This one-of-a-kind test prep guide helps you to test your knowledge of essential biochemistry and genetics concepts for the USMLE Step 1; practice with 500 ... Biochemistry and Genetics Pretest Self-Assessment and ... Great for course review and the USMLE Step 1, PreTest asks the right questions so you'll know the right answers. You'll find 500 clinical-vignette style ... Biochemistry - Basic Science - Medical Biochemistry and Genetics Pretest Self-Assessment and Review 5/E. Professional Biochemistry and Genetics Pretest Self-Assessment and Review 5/E 5th Edition ... Biochemistry and Genetics Pretest Self-Assessment and ... Jun 5, 2013 — Great for course review and the USMLE Step 1, PreTest asks the right questions so you'll know the right answers. You'll find 500 clinical- ... Pretest Biochemistry Genetics by Wilson Biochemistry and Genetics: Pretest Self-Assessment and Review, Fourth Edition (PreTest Basic Science) by Wilson, Golder and a great selection of related ... Biochemistry and Genetics Pretest Self-Assessment ... Home / Medical Books / Basic Sciences / Biochemistry / Biochemistry and Genetics Pretest Self-Assessment and Review – 5th Edition. Biochemistry and Genetics ... Biochemistry and Genetics Pretest Self-Assessment and ... Biochemistry and Genetics Pretest Self-Assessment and Review 5/E - GOOD ; Item Number. 276175046508 ; Brand. Unbranded ; Book Title. Biochemistry and Genetics ...