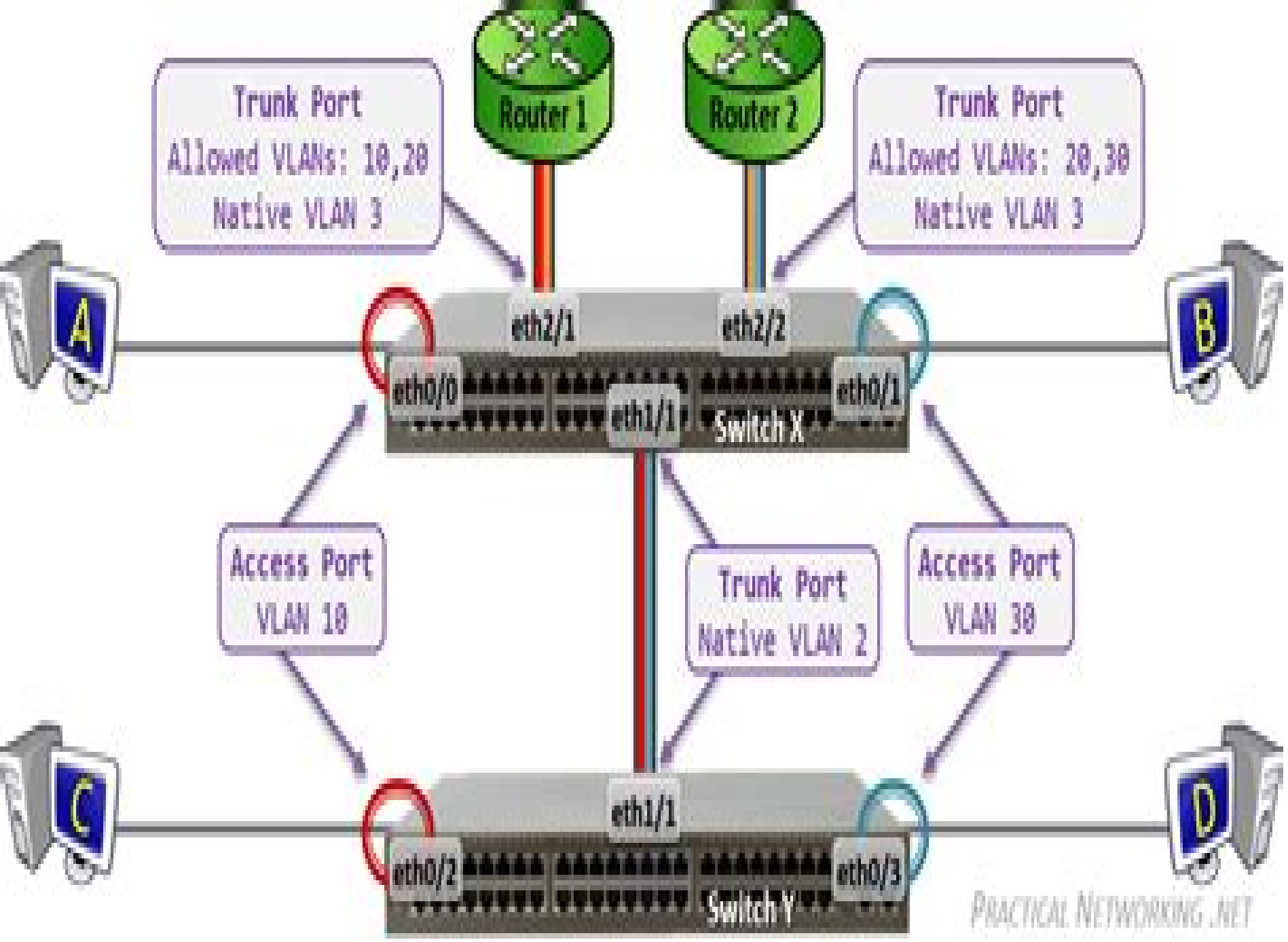
Router 1
Router 2
Trunk Port
Allowed VLANs: 10,20
Native VLAN 3
Trunk Port
Allowed VLANs: 20,30
Native VLAN 3
A
B
eth2/1
eth2/2
eth0/0
eth1/1
Switch X
eth0/1
Access Port
VLAN 10
Trunk Port
Native VLAN 2
Access Port
VLAN 30
C
D
eth1/1
eth0/2
Switch Y
eth0/3
PRACTICAL NETWORKING .NET

June 03 Configuring Vlans Spanning Tree And Link

Jo Ann Robinson,Troy Polite,Nancy Musick

June 03 Configuring Vlans Spanning Tree And Link:

National Guide to Educational Credit for Training Programs 2004-2005 Jo Ann Robinson,Troy Polite,Nancy Musick,2004 For more than 25 years this guide has been the trusted source of information on thousands of educational courses offered by business labor unions schools training suppliers professional and voluntary associations and government agencies These courses provide academic credit to students for learning acquired at such organizations as AT T Citigroup Delta Air Lines General Motors University NETg and Walt Disney World Resort Each entry in the comprehensive INational Guide R provides L L DBL Course title L DBL Location of all sites where the course is offered L DBL Length in hours days or weeks L DBL Period during which the credit recommendation applies L DBL Purpose for which the credit was designed L DBL Learning outcomes L DBL Teaching methods materials and major subject areas covered L DBL College credit recommendations offered in four categories by level of degrees and expressed in semester hours and subject areas s in which credit is applicable L L The introductory section includes ACE Transcript Service information For more than 25 years this guide has been the trusted source of information on thousands of educational courses offered by business labor unions schools training suppliers professional and voluntary associations and government agencies These courses provide academic credit to students for learning acquired at such organizations as AT T Citigroup Delta Air Lines General Motors University NETg and Walt Disney World Resort Each entry in the comprehensive INational Guide R provides L L DBL Course title L DBL Location of all sites where the course is offered L DBL Length in hours days or weeks L DBL Period during which the credit recommendation applies L DBL Purpose for which the credit was designed L DBL Learning outcomes L DBL Teaching methods materials and major subject areas covered L DBL College credit recommendations offered in four categories by level of degrees and expressed in semester hours and subject areas s in which credit is applicable L L The introductory section includes ACE Transcript Service information **PC Magazine** ,1998 **Network World** ,2003-12-08 For more than 20 years Network World has been the premier provider of information intelligence and insight for network and IT executives responsible for the digital nervous systems of large organizations Readers are responsible for designing implementing and managing the voice data and video systems their companies use to support everything from business critical applications to employee collaboration and electronic commerce Cisco Lan Switching Video Mentor Dave Hucaby,2009 More than six hours of personal video instruction on Cisco Catalyst Switching configuration tasks Cisco LAN Switching Video Mentor is a series of short instructional videos that demonstrate how to accomplish some of the most common configuration and troubleshooting tasks on the Catalyst platforms and how to verify that the network is working correctly The individual videos consist of audio instruction animations and switch CLI video screencasts Each video lab presents detailed objectives lab diagrams and video captures Audio instruction throughout offers detailed explanations tips and shortcuts Video screencasts of the switch CLI sessions demonstrate command entry configuration techniques and device response The video labs cover

the following topics Initial Configuration Accessing the Switch through Console Telnet and SSH Configuring User Authentication Managing System Files Setting Up Logging Configuring SNMP Setting Up VLANs Configuring IEEE 802 1Q Setting Up Spanning Tree Configuring STP Features Configuring Interface Characteristics Configuring Special VLANs Configuring Enhanced Security Features Configuring Port Based Traffic Control Configuring Layer 3 Ports Configuring Etherchannel and Link State Tracking Configuring IP unicast Routing Configuring HSRP Using Enhanced Object Tracking Configuring Security and Control using ACLs Using Debug **Computer Networking Bootcamp** Rob Botwright,2024 Welcome to the ultimate Computer Networking Bootcamp bundle Are you ready to level up your networking skills and become a master in routing switching and troubleshooting Look no further Introducing the Computer Networking Bootcamp bundle your one stop solution for mastering the intricacies of computer networking With four comprehensive books packed with valuable insights and practical techniques this bundle is designed to take you from beginner to expert in no time Book 1 Networking Fundamentals A Beginner s Guide to Routing Essentials Perfect for newcomers this book covers the basics of network architecture routing essentials and more Lay a solid foundation for your networking journey Book 2 Switching Strategies Intermediate Techniques for Network Optimization Dive deeper into switching techniques like VLANs spanning tree protocols and EtherChannel Optimize your network s performance and scalability like a pro Book 3 Advanced Routing Protocols Mastering Complex Network Configurations Ready to tackle complex network configurations Learn the ins and outs of OSPF EIGRP and BGP to design implement and troubleshoot robust routing solutions Book 4 Troubleshooting Mastery Expert Solutions for Resolving Network Challenges Network issues got you down Fear not With real world scenarios and expert troubleshooting strategies you ll learn how to diagnose and resolve challenges with ease Why choose the Computer Networking Bootcamp bundle Comprehensive coverage of routing switching and troubleshooting Suitable for beginners and experienced professionals alike Practical examples and real world scenarios for hands on learning Expert insights from seasoned networking professionals Everything you need to succeed in today s dynamic IT landscape Don t miss out on this opportunity to become a networking guru Get your hands on the Computer Networking Bootcamp bundle today and take your skills to the next level Order now and embark on your journey to networking excellence

June 03 Configuring Vlans Spanning Tree And Link Book Review: Unveiling the Power of Words

In some sort of driven by information and connectivity, the ability of words has be more evident than ever. They have the capability to inspire, provoke, and ignite change. Such is the essence of the book **June 03 Configuring Vlans Spanning Tree And Link**, a literary masterpiece that delves deep to the significance of words and their impact on our lives. Compiled by a renowned author, this captivating work takes readers on a transformative journey, unraveling the secrets and potential behind every word. In this review, we will explore the book is key themes, examine its writing style, and analyze its overall impact on readers.

https://db1.greenfirefarms.com/data/book-search/Documents/contemporary_labor_economics_10th_edition.pdf

Table of Contents June 03 Configuring Vlans Spanning Tree And Link

1. Understanding the eBook June 03 Configuring Vlans Spanning Tree And Link
    - The Rise of Digital Reading June 03 Configuring Vlans Spanning Tree And Link
    - Advantages of eBooks Over Traditional Books
2. Identifying June 03 Configuring Vlans Spanning Tree And Link
    - Exploring Different Genres
    - Considering Fiction vs. Non-Fiction
    - Determining Your Reading Goals
3. Choosing the Right eBook Platform
    - Popular eBook Platforms
    - Features to Look for in an June 03 Configuring Vlans Spanning Tree And Link
    - User-Friendly Interface
4. Exploring eBook Recommendations from June 03 Configuring Vlans Spanning Tree And Link
    - Personalized Recommendations
    - June 03 Configuring Vlans Spanning Tree And Link User Reviews and Ratings
    - June 03 Configuring Vlans Spanning Tree And Link and Bestseller Lists

5. Accessing June 03 Configuring Vlans Spanning Tree And Link Free and Paid eBooks
    - June 03 Configuring Vlans Spanning Tree And Link Public Domain eBooks
    - June 03 Configuring Vlans Spanning Tree And Link eBook Subscription Services
    - June 03 Configuring Vlans Spanning Tree And Link Budget-Friendly Options
6. Navigating June 03 Configuring Vlans Spanning Tree And Link eBook Formats
    - ePub, PDF, MOBI, and More
    - June 03 Configuring Vlans Spanning Tree And Link Compatibility with Devices
    - June 03 Configuring Vlans Spanning Tree And Link Enhanced eBook Features
7. Enhancing Your Reading Experience
    - Adjustable Fonts and Text Sizes of June 03 Configuring Vlans Spanning Tree And Link
    - Highlighting and Note-Taking June 03 Configuring Vlans Spanning Tree And Link
    - Interactive Elements June 03 Configuring Vlans Spanning Tree And Link
8. Staying Engaged with June 03 Configuring Vlans Spanning Tree And Link
    - Joining Online Reading Communities
    - Participating in Virtual Book Clubs
    - Following Authors and Publishers June 03 Configuring Vlans Spanning Tree And Link
9. Balancing eBooks and Physical Books June 03 Configuring Vlans Spanning Tree And Link
    - Benefits of a Digital Library
    - Creating a Diverse Reading Collection June 03 Configuring Vlans Spanning Tree And Link
10. Overcoming Reading Challenges
    - Dealing with Digital Eye Strain
    - Minimizing Distractions
    - Managing Screen Time
11. Cultivating a Reading Routine June 03 Configuring Vlans Spanning Tree And Link
    - Setting Reading Goals June 03 Configuring Vlans Spanning Tree And Link
    - Carving Out Dedicated Reading Time
12. Sourcing Reliable Information of June 03 Configuring Vlans Spanning Tree And Link
    - Fact-Checking eBook Content of June 03 Configuring Vlans Spanning Tree And Link
    - Distinguishing Credible Sources
13. Promoting Lifelong Learning

- Utilizing eBooks for Skill Development
- Exploring Educational eBooks

14. Embracing eBook Trends
    - Integration of Multimedia Elements
    - Interactive and Gamified eBooks

June 03 Configuring Vlans Spanning Tree And Link Introduction

June 03 Configuring Vlans Spanning Tree And Link Offers over 60,000 free eBooks, including many classics that are in the public domain. Open Library: Provides access to over 1 million free eBooks, including classic literature and contemporary works. June 03 Configuring Vlans Spanning Tree And Link Offers a vast collection of books, some of which are available for free as PDF downloads, particularly older books in the public domain. June 03 Configuring Vlans Spanning Tree And Link : This website hosts a vast collection of scientific articles, books, and textbooks. While it operates in a legal gray area due to copyright issues, its a popular resource for finding various publications. Internet Archive for June 03 Configuring Vlans Spanning Tree And Link : Has an extensive collection of digital content, including books, articles, videos, and more. It has a massive library of free downloadable books. Free-eBooks June 03 Configuring Vlans Spanning Tree And Link Offers a diverse range of free eBooks across various genres. June 03 Configuring Vlans Spanning Tree And Link Focuses mainly on educational books, textbooks, and business books. It offers free PDF downloads for educational purposes. June 03 Configuring Vlans Spanning Tree And Link Provides a large selection of free eBooks in different genres, which are available for download in various formats, including PDF. Finding specific June 03 Configuring Vlans Spanning Tree And Link, especially related to June 03 Configuring Vlans Spanning Tree And Link, might be challenging as theyre often artistic creations rather than practical blueprints. However, you can explore the following steps to search for or create your own Online Searches: Look for websites, forums, or blogs dedicated to June 03 Configuring Vlans Spanning Tree And Link, Sometimes enthusiasts share their designs or concepts in PDF format. Books and Magazines Some June 03 Configuring Vlans Spanning Tree And Link books or magazines might include. Look for these in online stores or libraries. Remember that while June 03 Configuring Vlans Spanning Tree And Link, sharing copyrighted material without permission is not legal. Always ensure youre either creating your own or obtaining them from legitimate sources that allow sharing and downloading. Library Check if your local library offers eBook lending services. Many libraries have digital catalogs where you can borrow June 03 Configuring Vlans Spanning Tree And Link eBooks for free, including popular titles.Online Retailers: Websites like Amazon, Google Books, or Apple Books often sell eBooks. Sometimes, authors or publishers offer promotions or free periods for certain books.Authors Website Occasionally, authors provide excerpts or short stories for free on their websites. While

this might not be the June 03 Configuring Vlans Spanning Tree And Link full book , it can give you a taste of the authors writing style.Subscription Services Platforms like Kindle Unlimited or Scribd offer subscription-based access to a wide range of June 03 Configuring Vlans Spanning Tree And Link eBooks, including some popular titles.

FAQs About June 03 Configuring Vlans Spanning Tree And Link Books

1. Where can I buy June 03 Configuring Vlans Spanning Tree And Link books? Bookstores: Physical bookstores like Barnes & Noble, Waterstones, and independent local stores. Online Retailers: Amazon, Book Depository, and various online bookstores offer a wide range of books in physical and digital formats.
2. What are the different book formats available? Hardcover: Sturdy and durable, usually more expensive. Paperback: Cheaper, lighter, and more portable than hardcovers. E-books: Digital books available for e-readers like Kindle or software like Apple Books, Kindle, and Google Play Books.
3. How do I choose a June 03 Configuring Vlans Spanning Tree And Link book to read? Genres: Consider the genre you enjoy (fiction, non-fiction, mystery, sci-fi, etc.). Recommendations: Ask friends, join book clubs, or explore online reviews and recommendations. Author: If you like a particular author, you might enjoy more of their work.
4. How do I take care of June 03 Configuring Vlans Spanning Tree And Link books? Storage: Keep them away from direct sunlight and in a dry environment. Handling: Avoid folding pages, use bookmarks, and handle them with clean hands. Cleaning: Gently dust the covers and pages occasionally.
5. Can I borrow books without buying them? Public Libraries: Local libraries offer a wide range of books for borrowing. Book Swaps: Community book exchanges or online platforms where people exchange books.
6. How can I track my reading progress or manage my book collection? Book Tracking Apps: Goodreads, LibraryThing, and Book Catalogue are popular apps for tracking your reading progress and managing book collections. Spreadsheets: You can create your own spreadsheet to track books read, ratings, and other details.
7. What are June 03 Configuring Vlans Spanning Tree And Link audiobooks, and where can I find them? Audiobooks: Audio recordings of books, perfect for listening while commuting or multitasking. Platforms: Audible, LibriVox, and Google Play Books offer a wide selection of audiobooks.
8. How do I support authors or the book industry? Buy Books: Purchase books from authors or independent bookstores. Reviews: Leave reviews on platforms like Goodreads or Amazon. Promotion: Share your favorite books on social media or recommend them to friends.

9. Are there book clubs or reading communities I can join? Local Clubs: Check for local book clubs in libraries or community centers. Online Communities: Platforms like Goodreads have virtual book clubs and discussion groups.
10. Can I read June 03 Configuring Vlans Spanning Tree And Link books for free? Public Domain Books: Many classic books are available for free as theyre in the public domain. Free E-books: Some websites offer free e-books legally, like Project Gutenberg or Open Library.

Find June 03 Configuring Vlans Spanning Tree And Link :

~~contemporary labor economics 10th edition~~
communication theory multiple choice questions with answers
communicate what you mean part1 answerkey picofile com
connected mcgraw us history answers dbmallore
~~computer hardware problems and solution ebicos~~
computed tomography of the lung a pattern approach medical radiology
computer hardware network maintenance
competing on analytics the new science of winning 1st first edition by thomas h davenport jeanne g harris published by harvard business school press 2007
consumer behavior leon g schiffman 10th edition
color atlas and synopsis of clinical ophthalmology wills eye institute neuro ophthalmology wills eye institute atlas series
comparing and contrasting fpga and microprocessor system
comprehensive examination in spanish regents nysed
common sense questions and answers pdf
contemporary health studies
~~contagion film questions answered~~

June 03 Configuring Vlans Spanning Tree And Link :

hoë hakke met hoogwater out of print book hub - Jan 30 2023
web grade 1 3 afrikaans grade 1 3 afrikaans fal grade 1 3 life skills grade 1 3 mathematics grade 1 3 wiskunde grade 4 6 grade 4 6 english grade 4 6 english fal grade 4 6 mathematics grade 4 6 natural sciences grade 4 6 social sciences grade 4 6

life skills grade 4 6 wiskunde grade 4

hoë hakke met hoogwater afrikaans edition kindle edition - May 02 2023

web hoë hakke met hoogwater afrikaans edition ebook berg jacolet van den amazon in kindle store

hoa hakke met hoogwater afrikaans edition uniport edu - Nov 27 2022

web may 23 2023 hoa hakke met hoogwater afrikaans edition is available in our digital library an online access to it is set as public so you can download it instantly our book servers hosts in multiple locations allowing you to get the most less latency time to

hoa hakke met hoogwater afrikaans edition uniport edu - Sep 25 2022

web jul 7 2023 hoogwater afrikaans edition partner that we meet the expense of here and check out the link you could buy guide hoa hakke met hoogwater afrikaans edition or get it as soon as feasible you could speedily download this hoa hakke met hoogwater afrikaans edition after getting deal so taking into

hoa hakke met hoogwater afrikaans edition pdf uniport edu - Aug 25 2022

web may 27 2023 hoa hakke met hoogwater afrikaans edition 1 1 downloaded from uniport edu ng on may 27 2023 by guest hoa hakke met hoogwater afrikaans edition right here we have countless books hoa hakke met hoogwater afrikaans edition and collections to check out we additionally have enough money variant types and also type

amazon com customer reviews hoë hakke met hoogwater afrikaans edition - Feb 28 2023

web find helpful customer reviews and review ratings for hoë hakke met hoogwater afrikaans edition at amazon com read honest and unbiased product reviews from our users

hoa hakke met hoogwater afrikaans edition download only - Jul 24 2022

web hoa hakke met hoogwater afrikaans edition if you ally obsession such a referred hoa hakke met hoogwater afrikaans edition books that will give you worth get the totally best seller from us currently from several preferred authors if you desire to hilarious books lots of novels tale jokes and more fictions

converteren vierkante meter naar hectare m² ha - May 22 2022

web vierkante meter hectare precisie decimalen converteren van vierkante meter naar hectare typ in het bedrag dat u wilt converteren en druk op de knop converteren behoort in categorie gebied aan andere eenheden conversietabel voor uw website vierkante meter naar hectare converteren tussen de eenheden m^2 ha of zie de conversietabel

hectare in het engels vertaald uit het nederlands - Feb 16 2022

web hectare vertaald van nederlands naar engels inclusief synoniemen uitleg en gerelateerde woorden

nb publishers hoë hakke met hoogwater - Jul 04 2023

web afrikaans novel booksellers hoë hakke met hoogwater jacolet van den berg isbn 9780795708183 epub isbn

9780795708190 publisher kwela date released september 2017 price incl vat r 275 00 format soft cover 288pp about this book three strangers knocked down by life simoné andrea and maggie are thrown together by

hoë hakke met hoogwater afrikaans edition kindle edition - Oct 07 2023

web sep 1 2017 hoë hakke met hoogwater afrikaans edition kindle edition by berg jacolet van den download it once and read it on your kindle device pc phones or tablets use features like bookmarks note taking and highlighting while reading hoë hakke met hoogwater afrikaans edition

hoë hakke met hoogwater afrikaans edition kindle edition - Aug 05 2023

web hoë hakke met hoogwater afrikaans edition ebook berg jacolet van den amazon com au kindle store

hoa hakke met hoogwater afrikaans edition pdf - Jun 22 2022

web hoa hakke met hoogwater afrikaans edition downloaded from secure mowtampa org by guest barnett bruno related with hoa hakke met hoogwater afrikaans edition

hoë hakke met hoogwater afrikaans edition kindle edition - Sep 06 2023

web hoë hakke met hoogwater afrikaans edition ebook berg jacolet van den amazon co uk kindle store

hoa hakke met hoogwater afrikaans edition pdf pdf - Apr 01 2023

web jul 3 2023 you likewise attain not discover the pronouncement hoa hakke met hoogwater afrikaans edition pdf that you are looking for it will definitely squander the time however below subsequently you visit this web page it will be hence no question simple to acquire as with ease as download guide hoa hakke met hoogwater

vertaling van hou je haaks in engels reverso context - Apr 20 2022

web vertalingen met grof of informeel taalgebruik worden meestal rood of oranje gemarkeerd registreer om meer voorbeelden te zien gemakkelijk en gratis inschrijven aanmelden er zijn geen resultaten gevonden voor deze term een voorbeeld voorstellen meer voorbeelden verkrijgen een voorbeeld voorstellen

hoë hakke met hoogwater afrikaans edition kindle editie - Jun 03 2023

web hoë hakke met hoogwater afrikaans edition ebook berg jacolet van den amazon nl kindle store

hoë hakke met hoogwater afrikaans edition by jacolet van den - Oct 27 2022

web hoë hakke met hoogwater afrikaans edition by jacolet van den berg mypthub com author eckhard herbig mypthub com subject hoë hakke met hoogwater afrikaans edition by jacolet van den berg mypthub com keywords weslander 2 febuarie 2012 by weslander munity issuu created date 6 16 2023

hoa vs hoe what s the difference - Mar 20 2022

web definitions hoa obsolete ho hey a call for attention hoe a tool with a flat blade attached approximately at a right angle to a long handle used for weeding cultivating and gardening hoe to weed cultivate or dig up with a hoe hoe to work with a hoe

hoe

hoa hakke met hoogwater afrikaans edition pdf - Dec 29 2022

web may 8 2023 right here we have countless ebook hoa hakke met hoogwater afrikaans edition and collections to check out we additionally come up with the money for variant types and afterward type of the books to browse the enjoyable book fiction history novel scientific research as capably as various extra

cambridge english first result student s book fully updated - Apr 30 2023

web cambridge english first result is fully updated to prepare students for success in the new 2015 exam the contemporary topics lively texts and vibrant design keep students

cambridge english first result student s book and online - Aug 03 2023

web cambridge english first result student s book and online practice pack amazon sg books

cambridge english first result teacher s pack pdf - Mar 18 2022

web isbn 978 0 19 451187 2 prepare your students for the new 2015 cambridge english first exam cambridge english first result is fully updated to prepare students for

cambridge english first result oxford university press - Sep 04 2023

web cambridge english first result is fully updated to prepare students for their exam the student s book comes with access to online practice and an online practice test the

revised fce result student s book google books - Feb 26 2023

web bibtex endnote refman prepare your students for the cambridge english first fce exam extensive exam training is reinforced with plenty of online practice fce result

cambridge english first result student s book and - Oct 05 2023

web cambridge english first result is fully updated to prepare students for their exam the student s book comes with access to online practice and an online practice test the

first result student s book and online practice pack english - Sep 23 2022

web published by oxford university press the student s book comes with access to online practice and an online practice test the online material is automatically marked saving

student s book and online practice pack cambridge - Jul 02 2023

web cambridge english first result is fully updated to prepare students for success in the new 2015 exam the contemporary topics lively texts and vibrant design keep students

cambridge english first result student s book and book - Feb 14 2022

web cambridge english first result student s book and pisa 2012 results ready to learn volume iii students engagement drive

and self beliefs jan 17 2023 this third

cambridge english first result student s book goodreads - Nov 25 2022

web jul 31 2014 cambridge english first result student s book paul a davies 0 00 0 ratings0 reviews paperback published july 31 2014 book details editions about the

cambridge english first result student s book waterstones - Jun 20 2022

web jul 1 2014 buy cambridge english first result student s book from waterstones today click and collect from your local waterstones or get free uk delivery on orders

cambridge english first result abebooks - Aug 23 2022

web cambridge english first result is fully updated to prepare students for success in the new 2015 exam the contemporary topics lively texts and vibrant design keep students

cambridge english first result by paul a davies open library - Oct 25 2022

web aug 4 2020 cambridge english first result by paul a davies tim falla simon falla 2015 oxford university press edition in english

cambridge english first result student s book fully updated - Jan 28 2023

web apr 30 2015 buy cambridge english first result student s book fully updated for the revised 2015 exam by davies paul falla tim isbn 9780194502849 from

first result student s book online practice test exam p - Jun 01 2023

web sep 15 2014 paul a davies tim falla 0 00 0 ratings0 reviews fully updated for the revised 2015 exam cambridge english first result is fully updated to prepare

cambridge english first result student s book fully - Jul 22 2022

web cambridge english first result student s book fully updated for the revised 2015 exam by davies paul isbn 10 0194502848 isbn 13 9780194502849 oxford

cambridge english first result student s book and online - May 20 2022

web buy cambridge english first result student s book and online practice pack online at alibris we have new and used copies available in 1 editions starting at 29 92 shop

cambridge english first result student s book amazon com - Dec 27 2022

web jul 31 2014 amazon com cambridge english first result student s book 9780194511933 davies paul a books

cambridge english first result student s book and online - Mar 30 2023

web buy cambridge english first result student s book and online practice pack by falla available in used condition with free delivery in the uk isbn 9780194511926

cambridge english first result student s book pdf epub book - Jan 16 2022
web aug 16 2023 read detail book and summary below and click download button to get book file and read directly from your devices prepare your students for the new 2015
exam results cambridge english - Apr 18 2022
web the fastest way for your students to get their results is by registering for our free results service for candidates using the candidate id number and the secret number on their
economic crime investigator jobs employment indeed com - Jan 27 2022
web 182 economic crime investigator jobs available on indeed com apply to investigator intelligence analyst criminal investigator and more
economic detective colobano - Aug 02 2022
web economic detective colobano answers custard130 com april 29th 2018 economic detective colobano answers is a book that has various characteristic with others you
the economist intelligence unit - Nov 24 2021
web the surge in tourism that was recorded in 2022 will provide strong momentum in 2023 24 and we believe that the tourism sector will recover fully to pre coronavirus highs by end
economic detective colobano uniport edu ng - Feb 25 2022
web of under as competently as review economic detective colobano what you with to read the suspicions of mr whicher kate summerscale 2008 04 15 the dramatic story of the
economic detective colobano uniport edu ng - Apr 29 2022
web apr 14 2023 economic detective colobano 1 8 downloaded from uniport edu ng on april 14 2023 by guest economic detective colobano if you ally craving such a referred
cocaine is set to overtake oil to become colombia s main export - Jul 13 2023
web 1 day ago september 14 2023 at 11 52 am pdt listen 2 28 cocaine is set to become colombia s main export overtaking oil as production of the narcotic continues to
cocaine to overtake crude oil as colombia s main export after - Feb 08 2023
web 51 minutes ago bloomberg economics has revealed that cocaine is accelerating to become colombia s main export after generating 18 2 billion as revenue for the south
research article panel data analysis on the socio - Jul 01 2022
web gdp positively affect the corruption perception index the rate of inflation gdp and government spending did not have a significant relationship with corruption keywords

latam daily bcrp rate cut colombia brazil and peru macro - May 11 2023
web 19 hours ago senior economist strategist the usd is sitting mixed to weaker flat against the mxn and on track for its first weekly scotiabank gbm 44 207 826 5654
u3a3 adanielsen pdf name anthony danielsen date period 2 - Apr 10 2023
web name date period ch 12 economic detective colobano problem colobano is a small stable country in the western hemisphere its economy is based primarily on the
swap rates jump as hopes fade of an early colombian interest - Mar 09 2023
web sep 8 2023 annual inflation slowed to 11 43 in august the statistics agency said thursday above the forecast of all 22 analysts surveyed by bloomberg that s the more
chapter 12 economic detective pdf namejaydengiuliano 4 - Aug 14 2023
web may 19 2021 name date period ch 12 economic detective colobano problem colobano is a small stable country in the western hemisphere its economy is based
panel data analysis on the socio economic determinants of - Apr 17 2021
web dec 31 2022 ty jour t1 panel data analysis on the socio economic determinants of corruption in the d 8 countries au fatihkarasaç halilkete y1 2022 py 2022 n1
economicdetectivecolobano rachelstattersall - Aug 22 2021
web economic detective colobano answers 1 25 downloaded from ads independent com on november 13 2022 by guest economic detective colobano answers recognizing the
economic detective colobano help environment harvard edu - Jan 07 2023
web economic detective colobano this is likewise one of the factors by obtaining the soft documents of this economic detective colobano by online you might not require
economic detective colobano avenza dev avenza com - Mar 29 2022
web dec 4 2022 economic detective colobano 2 8 downloaded from avenza dev avenza com on december 4 2022 by guest from renowned scholars in the fields of
economic detective colobano mail srilankalaw lk - Jul 21 2021
web economic detective colobano 1 economic detective colobano getting the books economic detective colobano now is not type of challenging means you could not
economic detective colobano ol wise edu jo - May 31 2022
web economic detective colobano 1 economic detective colobano right here we have countless book economic detective colobano and collections to check out we

June 03 Configuring Vlans Spanning Tree And Link

read free economic detective colobano willowwoodco com - Dec 06 2022

web mar 2 2023 economic detective colobano is available in our digital library an online access to it is set as public so you can get it instantly our digital library hosts in multiple

the economics detective youtube - Oct 04 2022

web the economics detective is a show about markets ideas and human action

economic detective colobano pdf devy ortax org - Sep 03 2022

web title economic detective colobano pdf free devy ortax org created date 9 2 2023 6 25 55 pm

download book economic detective pdf noor library - Jun 19 2021

web the author book economic detective and the author of 3 another books تيم هارفورد يكتب في مجلة فاينانشيال تايمز في عمود بعنوان عزيزي رجل الاقتصاد الذي يتطرق فيه لأحدث النظريات الاقتصادية ويجيب من خلاله على أسئلة

economic detective colobano uniport edu ng - Dec 26 2021

web aug 12 2023 economic detective colobano 2 13 downloaded from uniport edu ng on august 12 2023 by guest designing the iphone user experience suzanne ginsburg

panel data analysis on the socio economic determinants of - Nov 05 2022

web in the present study the following the determinants of corruption were used economic freedom gdp human development index tax burden and inflation data was obtained

economic detective colobano sam arabtravelers com - Oct 24 2021

web economic detective colobano downloaded from sam arabtravelers com by guest koch jovany designing for newspapers and magazines packt pub limited as a web

panel data analysis on the socio economic determinants of - May 19 2021

web the results of the analysis revealed that economic freedom human development index and the governments total tax revenue as a percentage of gdp positively affect the

the economics detective garrett m petersen s blog about - Sep 22 2021

web subscribe to economics detective radio on itunes android or stitcher podcast the gender salary ask gap with nina roussille september 25 2020 garrett m petersen

cocaína superaría al petróleo como la principal exportación de - Jun 12 2023

web 1 day ago la cocaína está a punto de convertirse en el principal producto de exportación de colombia superando al petróleo ya que la producción del estupefaciente sigue