Dell™ 1355cn/1355cnw Multifunction Color Printer

Quick Reference Guide

About Your Printer

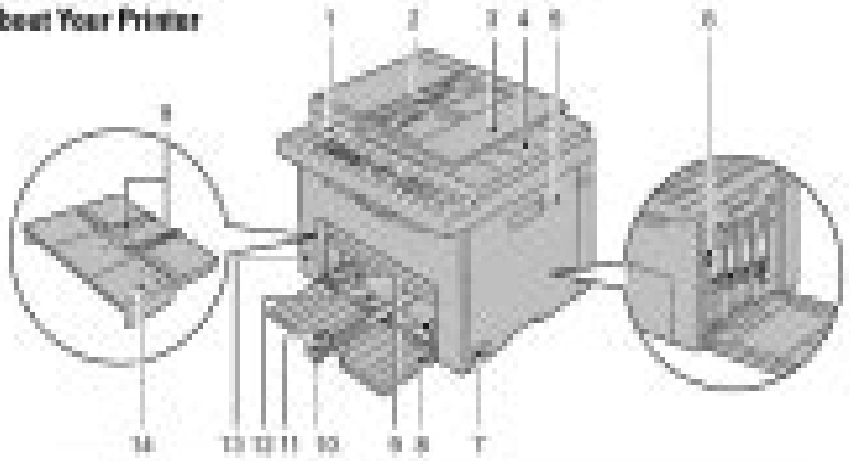

1	Operator Panel	2	Automatic Document Feeder (ADF)
3	Document Feeder Tray	4	Document Output Tray
5	Toner Access Cover	6	Cleaning Rod
7	Power Switch	8	Front Cover
9	Paper Width Guides	10	Length Guide
11	MPF Extension	12	Multipurpose Feeder (MPF)
13	Front USB Port	14	Priority Sheet Inserter (PSI)

Locating the Service Tag

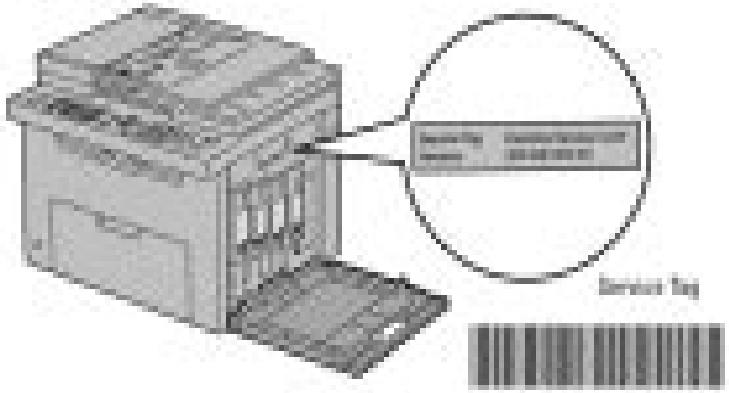

November 2010

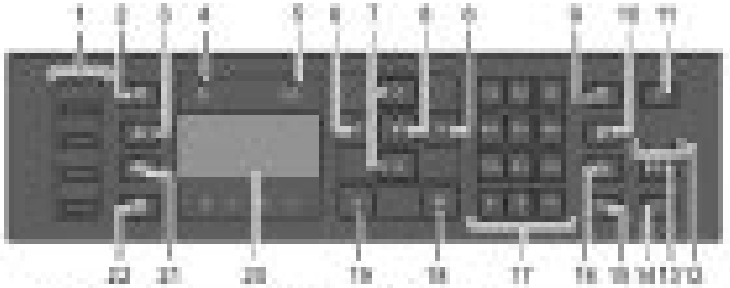

1	One Touch Dial button	Calls up the stored Fax number.
2	(Copy) button	Moves a startup menu for the Copy menu.
3	(Fax) button	Moves a startup menu for the Fax menu.
4	Data LED	Lights up for incoming, outgoing, or pending Fax jobs.
5	Ready / Error LED	• Lights up when the printer is ready. (Ready LED) • Lights up when the printer has an error. (Error LED)
6	> < button	Moves a cursor or highlight to the selected position.
7	∧ ∨ button	Moves a cursor or highlight to the selected position.
8	(Set) button	Confirms the entry of values.
9	(Contacts) button	Moves to the Address Book menu for the Fax and Scan services.
10	(Redial / Pause) button	Redials a telephone number.
11	(Cancel) button	Cancels the current processing or pending job.
12	B&W / Color LED	Lights up to display which color mode is being selected.
13	(Color Mode) button	Switches the color mode.
14	(Start) button	Starts a job.
15	(Speed Dial) button	Calls up the stored telephone number.
16	(Backspace) button	Deletes characters and numbers.
17	Numeric keypad	Enters characters and numbers.
18	All (All Sheet) button	Reads the current setting, and returns to the top menu.
19	(Back) button	Returns to a previous screen.
20	LCD Panel	Displays various settings, instructions, and error messages.
21	(Scan) button	Moves a startup menu for the Scan menu.
22	(Menu) button	Moves a startup menu for the Print from USB Memory, Job Status, and System menus.

Dell 1355cn Service Manual

JA Banks

Dell 1355cn Service Manual:

The Enigmatic Realm of **Dell 1355cn Service Manual**: Unleashing the Language is Inner Magic

In a fast-paced digital era where connections and knowledge intertwine, the enigmatic realm of language reveals its inherent magic. Its capacity to stir emotions, ignite contemplation, and catalyze profound transformations is nothing short of extraordinary. Within the captivating pages of **Dell 1355cn Service Manual** a literary masterpiece penned by way of a renowned author, readers attempt a transformative journey, unlocking the secrets and untapped potential embedded within each word. In this evaluation, we shall explore the book is core themes, assess its distinct writing style, and delve into its lasting affect the hearts and minds of those that partake in its reading experience.

https://db1.greenfirefarms.com/results/Resources/Documents/pro%20sleep%20hygiene%20tips%20ideas%20for%20workers.pdf

Table of Contents Dell 1355cn Service Manual

1. Understanding the eBook Dell 1355cn Service Manual
    - The Rise of Digital Reading Dell 1355cn Service Manual
    - Advantages of eBooks Over Traditional Books
2. Identifying Dell 1355cn Service Manual
    - Exploring Different Genres
    - Considering Fiction vs. Non-Fiction
    - Determining Your Reading Goals
3. Choosing the Right eBook Platform
    - Popular eBook Platforms
    - Features to Look for in an Dell 1355cn Service Manual
    - User-Friendly Interface
4. Exploring eBook Recommendations from Dell 1355cn Service Manual
    - Personalized Recommendations
    - Dell 1355cn Service Manual User Reviews and Ratings

- Dell 1355cn Service Manual and Bestseller Lists

5. Accessing Dell 1355cn Service Manual Free and Paid eBooks
    - Dell 1355cn Service Manual Public Domain eBooks
    - Dell 1355cn Service Manual eBook Subscription Services
    - Dell 1355cn Service Manual Budget-Friendly Options
6. Navigating Dell 1355cn Service Manual eBook Formats
    - ePub, PDF, MOBI, and More
    - Dell 1355cn Service Manual Compatibility with Devices
    - Dell 1355cn Service Manual Enhanced eBook Features
7. Enhancing Your Reading Experience
    - Adjustable Fonts and Text Sizes of Dell 1355cn Service Manual
    - Highlighting and Note-Taking Dell 1355cn Service Manual
    - Interactive Elements Dell 1355cn Service Manual
8. Staying Engaged with Dell 1355cn Service Manual
    - Joining Online Reading Communities
    - Participating in Virtual Book Clubs
    - Following Authors and Publishers Dell 1355cn Service Manual
9. Balancing eBooks and Physical Books Dell 1355cn Service Manual
    - Benefits of a Digital Library
    - Creating a Diverse Reading Collection Dell 1355cn Service Manual
10. Overcoming Reading Challenges
    - Dealing with Digital Eye Strain
    - Minimizing Distractions
    - Managing Screen Time
11. Cultivating a Reading Routine Dell 1355cn Service Manual
    - Setting Reading Goals Dell 1355cn Service Manual
    - Carving Out Dedicated Reading Time
12. Sourcing Reliable Information of Dell 1355cn Service Manual
    - Fact-Checking eBook Content of Dell 1355cn Service Manual
    - Distinguishing Credible Sources

13. Promoting Lifelong Learning
    - Utilizing eBooks for Skill Development
    - Exploring Educational eBooks
14. Embracing eBook Trends
    - Integration of Multimedia Elements
    - Interactive and Gamified eBooks

Dell 1355cn Service Manual Introduction

In todays digital age, the availability of Dell 1355cn Service Manual books and manuals for download has revolutionized the way we access information. Gone are the days of physically flipping through pages and carrying heavy textbooks or manuals. With just a few clicks, we can now access a wealth of knowledge from the comfort of our own homes or on the go. This article will explore the advantages of Dell 1355cn Service Manual books and manuals for download, along with some popular platforms that offer these resources. One of the significant advantages of Dell 1355cn Service Manual books and manuals for download is the cost-saving aspect. Traditional books and manuals can be costly, especially if you need to purchase several of them for educational or professional purposes. By accessing Dell 1355cn Service Manual versions, you eliminate the need to spend money on physical copies. This not only saves you money but also reduces the environmental impact associated with book production and transportation. Furthermore, Dell 1355cn Service Manual books and manuals for download are incredibly convenient. With just a computer or smartphone and an internet connection, you can access a vast library of resources on any subject imaginable. Whether youre a student looking for textbooks, a professional seeking industry-specific manuals, or someone interested in self-improvement, these digital resources provide an efficient and accessible means of acquiring knowledge. Moreover, PDF books and manuals offer a range of benefits compared to other digital formats. PDF files are designed to retain their formatting regardless of the device used to open them. This ensures that the content appears exactly as intended by the author, with no loss of formatting or missing graphics. Additionally, PDF files can be easily annotated, bookmarked, and searched for specific terms, making them highly practical for studying or referencing. When it comes to accessing Dell 1355cn Service Manual books and manuals, several platforms offer an extensive collection of resources. One such platform is Project Gutenberg, a nonprofit organization that provides over 60,000 free eBooks. These books are primarily in the public domain, meaning they can be freely distributed and downloaded. Project Gutenberg offers a wide range of classic literature, making it an excellent resource for literature enthusiasts. Another popular platform for Dell 1355cn Service Manual books and manuals is Open Library. Open Library is an initiative of the Internet Archive, a non-profit organization dedicated to digitizing cultural artifacts and making them accessible to the public. Open Library hosts millions

of books, including both public domain works and contemporary titles. It also allows users to borrow digital copies of certain books for a limited period, similar to a library lending system. Additionally, many universities and educational institutions have their own digital libraries that provide free access to PDF books and manuals. These libraries often offer academic texts, research papers, and technical manuals, making them invaluable resources for students and researchers. Some notable examples include MIT OpenCourseWare, which offers free access to course materials from the Massachusetts Institute of Technology, and the Digital Public Library of America, which provides a vast collection of digitized books and historical documents. In conclusion, Dell 1355cn Service Manual books and manuals for download have transformed the way we access information. They provide a cost-effective and convenient means of acquiring knowledge, offering the ability to access a vast library of resources at our fingertips. With platforms like Project Gutenberg, Open Library, and various digital libraries offered by educational institutions, we have access to an ever-expanding collection of books and manuals. Whether for educational, professional, or personal purposes, these digital resources serve as valuable tools for continuous learning and self-improvement. So why not take advantage of the vast world of Dell 1355cn Service Manual books and manuals for download and embark on your journey of knowledge?

FAQs About Dell 1355cn Service Manual Books

How do I know which eBook platform is the best for me? Finding the best eBook platform depends on your reading preferences and device compatibility. Research different platforms, read user reviews, and explore their features before making a choice. Are free eBooks of good quality? Yes, many reputable platforms offer high-quality free eBooks, including classics and public domain works. However, make sure to verify the source to ensure the eBook credibility. Can I read eBooks without an eReader? Absolutely! Most eBook platforms offer webbased readers or mobile apps that allow you to read eBooks on your computer, tablet, or smartphone. How do I avoid digital eye strain while reading eBooks? To prevent digital eye strain, take regular breaks, adjust the font size and background color, and ensure proper lighting while reading eBooks. What the advantage of interactive eBooks? Interactive eBooks incorporate multimedia elements, quizzes, and activities, enhancing the reader engagement and providing a more immersive learning experience. Dell 1355cn Service Manual is one of the best book in our library for free trial. We provide copy of Dell 1355cn Service Manual in digital format, so the resources that you find are reliable. There are also many Ebooks of related with Dell 1355cn Service Manual. Where to download Dell 1355cn Service Manual online for free? Are you looking for Dell 1355cn Service Manual PDF? This is definitely going to save you time and cash in something you should think about. If you trying to find then search around for online. Without a doubt there are numerous these available and many of them have the freedom. However without doubt you receive

whatever you purchase. An alternate way to get ideas is always to check another Dell 1355cn Service Manual. This method for see exactly what may be included and adopt these ideas to your book. This site will almost certainly help you save time and effort, money and stress. If you are looking for free books then you really should consider finding to assist you try this. Several of Dell 1355cn Service Manual are for sale to free while some are payable. If you arent sure if the books you would like to download works with for usage along with your computer, it is possible to download free trials. The free guides make it easy for someone to free access online library for download books to your device. You can get free download on free trial for lots of books categories. Our library is the biggest of these that have literally hundreds of thousands of different products categories represented. You will also see that there are specific sites catered to different product types or categories, brands or niches related with Dell 1355cn Service Manual. So depending on what exactly you are searching, you will be able to choose e books to suit your own need. Need to access completely for Campbell Biology Seventh Edition book? Access Ebook without any digging. And by having access to our ebook online or by storing it on your computer, you have convenient answers with Dell 1355cn Service Manual To get started finding Dell 1355cn Service Manual, you are right to find our website which has a comprehensive collection of books online. Our library is the biggest of these that have literally hundreds of thousands of different products represented. You will also see that there are specific sites catered to different categories or niches related with Dell 1355cn Service Manual So depending on what exactly you are searching, you will be able tochoose ebook to suit your own need. Thank you for reading Dell 1355cn Service Manual. Maybe you have knowledge that, people have search numerous times for their favorite readings like this Dell 1355cn Service Manual, but end up in harmful downloads. Rather than reading a good book with a cup of coffee in the afternoon, instead they juggled with some harmful bugs inside their laptop. Dell 1355cn Service Manual is available in our book collection an online access to it is set as public so you can download it instantly. Our digital library spans in multiple locations, allowing you to get the most less latency time to download any of our books like this one. Merely said, Dell 1355cn Service Manual is universally compatible with any devices to read.

Find Dell 1355cn Service Manual :

pro sleep hygiene tips ideas for workers
ultimate gut health foods tips for creators
pro capsule wardrobe tips for students
~~trending gut health foods online for creators~~
~~simple blog post ideas explained for creators~~
affordable ai tools ideas for creators

advanced affiliate marketing for students for experts
ultimate keyword research step plan for workers
why pilates for beginners tips
pro minimalist lifestyle for creators for workers
top method for home workout ideas
why pilates for beginners full tutorial
advanced us national parks explained for beginners
best gut health foods ideas for creators
top keyword research for small business

Dell 1355cn Service Manual :

Soluzioni Esercizi Libri Black Cat SOLUZIONI ESERCIZI LIBRI BLACK CAT BOOK TESTIMONIAL. Invite to Soluzioni Esercizi Libri Black Cat review section! As serious readers ourselves, we know. Black Cat Soluzioni Libri Libri Di Grammatica Inglese Con Esercizi E Soluzioni · Frankenstein Black Cat Soluzioni · Black Cat Soluzioni Esercizi · Beowulf Black Cat Soluzioni Esercizi ... Soluzioni esercizi Black Cat "Robinson Crusoe" Scarica Soluzioni esercizi Black Cat "Robinson Crusoe" e più Esercizi in PDF di Inglese solo su Docsity! Daniel Defoe and his World Page 10 — activity 1 1C ... Beowulf Black Cat Soluzioni Pdf - Fill Online, Printable ... Get, Create, Make and Sign soluzioni esercizi beowulf black cat · How to edit beowulf black cat soluzioni pdf online · Comments and Help with beowulf soluzioni ... black - cat Sotto le copertine dei libri trovi le statistiche generali relative a quello specifico titolo, calcolate sulla media dei risultati di tutti esercizi svolti ... Beowulf black cat soluzioni: Fill out & sign online Edit, sign, and share beowulf black cat soluzioni pdf online. No need to install software, just go to DocHub, and sign up instantly and for free. Black Cat Soluzioni Esercizi Black Cat Esercizi Con Soluzioni PDF · Beowulf Black Cat Soluzioni Esercizi · The Canterbury Tales Black Cat Soluzioni Esercizi · Frankenstein Black Cat Soluzioni ... Soluzioni esercizi Black Cat "Frankenstein" Scarica Soluzioni esercizi Black Cat "Frankenstein" e più Esercizi in PDF di Inglese solo su Docsity! The Life of Mary Shelley Page 6 — Activities1&2 Open ... Risorse gratuite | Black Cat Risorse gratuite · Lesson Plans · Attività di Reading and Listening · Pillole Video con suggerimenti su come usare le letture graduate. The Daily Bible by Smith, F. LaGard The Daily Bible® makes it simple by organizing the whole of Scripture in chronological order, as well as presenting Proverbs topically and the Psalms by themes. The Daily Bible® - In Chronological Order (NIV®) As this unique, chronological presentation of God's story daily unfolds before you, you will begin to appreciate God's plan for your life as never before. The Daily Bible (NIV) As this unique, chronological presentation of God's story daily unfolds before you, you will begin to appreciate God's plan for your life as never before. The Daily Bible - In Chronological Order (NIV) -

eBook ... - enable you to focus on specific aspects of God's wisdom. The Daily Bible - In Chronological Order (NIV) - eBook (9780736983211) by F. LaGard Smith. The Daily Bible - F. LaGard Smith The Daily Bible® in chronological order with 365 daily readings with devotional insights by F. LaGard Smith to guide you through God's Word (NIV). Check It Out ... The Daily Bible (NIV) by F. LaGard Smith, Paperback As this unique, chronological presentation of God's story daily unfolds before you, you will begin to appreciate God's plan for your life as never before. The Daily Bible® - In Chronological Order (NIV®) As this unique, chronological presentation of God's story daily unfolds before you, you will begin to appreciate God's plan for your life as never before. 365 Daily Readings In Chronological Order, Paperback New International Version Bible (NIV) arranged chronologically for 365 daily readings ... LaGard Smith is the author of more than 30 books and is the compiler and ... The Daily Bible: In Chronological Order 365 Daily Readings In the hardcover edition of the bestselling and much-loved chronological presentation of the Bible, God's story unfolds before readers each new day, ... The Daily Bible (niv) - By F Lagard Smith (hardcover) As this unique, chronological presentation of God's story daily unfolds ... It's also in chronological order so it's more interesting how it all went in order. Advanced Reading Power TB KEY - TEACHER'S GUIDE ... Advanced Reading Power Teacher Book key guide with answer key beatrice ... Reading, Vocabulary Building, Comprehension Skills, Reading Faster Teacher's Guide with ... Advanced Reading Power: Teacher's Guide with Answer ... Advanced Reading Power: Teacher's Guide with Answer Key [Beatrice S. Mikulecky, Linda Jeffries] on Amazon.com. *FREE* shipping on qualifying offers. Teacher's guide with answer key [for] Advanced reading ... Teacher's guide with answer key [for] Advanced reading power. Authors: Linda Jeffries, Beatrice S. Mikulecky. Front cover image for Teacher's guide with ... Advanced Reading Power Advanced ... Advanced Reading Power is unlike most other reading textbooks. First, the focus is different. This book directs students' attention to their own reading ... Advanced Reading Power Teacher's Guide with Answer Key For teaching and giving advice is a good option for improving your reading skills, but unfortunately, it's not a great choice for practice and doing exercises. reading power answer key - Used Advanced Reading Power: Teacher's Guide with Answer Key by Beatrice S. Mikulecky, Linda Jeffries and a great selection of related books, ... Advanced Reading Power: Teacher's Guide with Answer Key Our dedicated customer service team is always on hand to answer any questions or concerns and to help customers find the perfect book. So whether you're an avid ... Advanced Reading Power: Teacher's Guide with Answer Key Advanced Reading Power: Teacher's Guide with Answer Key · by Linda Jeffries Beatrice S. Mikulecky · $5.14 USD. $5.14 USD. Advance reading power pdf ... Answer Key booklet. For a more complete explanation of the theory and methodology see A Short Course in Teaching Reading Skills by Beatrice S. Mikulecky ...